WBSPF – AIP
Status update

Miroslav Pantaleev

On behalf of the WBSPF consortium

Miroslav Pantaleev

5th SKA Engineering Meeting

13th of June, Rotterdam

SKA SQUARE KILOMETRE ARRAY

WIDE BAND SINGLE PIXEL FEEDS

Outline

- Introduction
- Resources
- Progress update
- Science
- Plans

Scope of WBSP - AIP

Initial commitment in our proposal was:

- Derive functional and performance requirements for the WBSPF technology;
- Design and analysis of the WBSPF technology, with a view to meeting the required Aeff/Tys performance in SKA dish optics;
- Derive cost model and analyse how performance and costs changes with increasing fractional BW.
- Use the developed cost model to provide information to SKAO on construction, operation and schedule constraints.
- Optimize the design taking advantage of the most economic and efficient industrial methodologies and thereby ensuring competitive costs.
- Develop Wideband Single Pixel feeds and LNAs to reduce costs/expand science capability. For SKA1 later deployment or SKA2.

After the re-baselining, we have agreed with SKAO:

- As minimum requires building and verifying components/feeds versus model. Proposal left open to involve building test system from components.
- Carry on the design work of Band B to CDR level and compare performance with Band 5 from DISH.

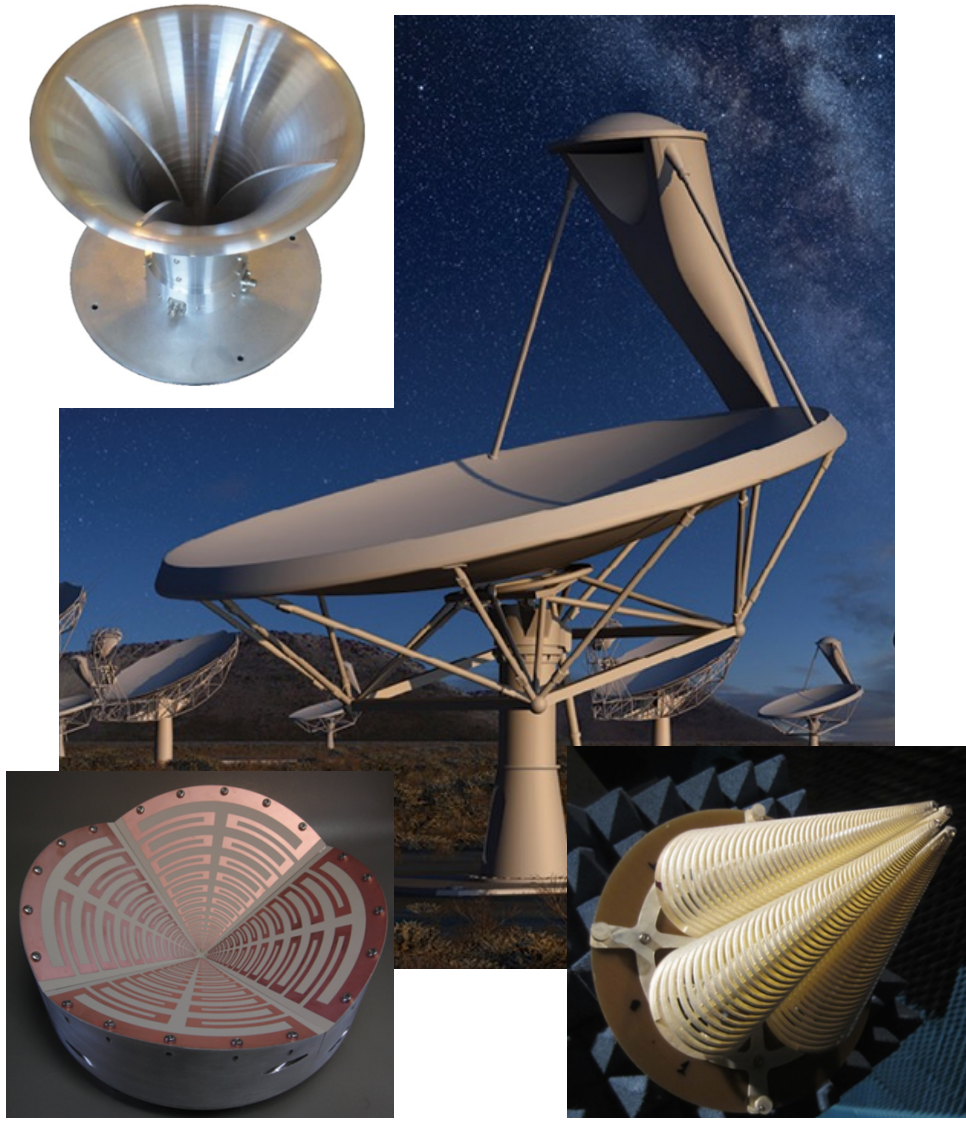

Pros and Cons

WIDE BAND SINGLE PIXEL FEEDS

Pros

- Wider observing bandwidth for continuum sensitivity
- Simultaneous multiple line/wider z searches.
- Wider pulsar time DM range.
- Serendipity/SETI signals.

- Fewer Feed/LNA packages - reduce capital cost (10% dish cost per band saved)
- Energy and maintenance costs.
- Quicker deployment of wide range of science.
- For fixed number receivers, cover wider frequency range, especially at highest end of the frequency band.
- Complex optimization on 'total cost of ownership' + science + hardware

Cons

- Lower sensitivity (10% – 20%) than octave solutions
- Complex optimization on 'total cost of ownership' + science + hardware (operationals) limits.
- Use Baseline IF BW, mulitple/tunable Sub-bands
- Higher IF bandwidth will be available in SKA 2

Consortium members and WPs

Band A 1.6 GHz-5.2 GHz (= B3+B4) + cryo

China

- JLRAT – overall management
- NAOC – Feed and LNA design
- CETC54 – Feed design, integration and tests
- TIPC – WBSPF Cryostat design
- SHAO – LNA design

US (sub-contractor to JLRAT)

Caltech – LNA design and Feed/Cryogenic consultancy

Band B 4.6 - 24GHz (= B5a, b, c) + receiver

Sweden

- Onsala Onbservatory – Consortia lead, - integration, system tests
- Chalmers/MEL – LNA design
- Low Noise Factory – LNA prototyping
- Chalmers/S2/Antenna group - feed design

Netherlands

ASTRON – cryogenics and system tests

Germany

- IAF – MMIC processing
- MPIfR – LNA design and testing

France

- University of Bordeaux / LAB – receivers

Earned value for the consortia 2.7MEuro

Requirements

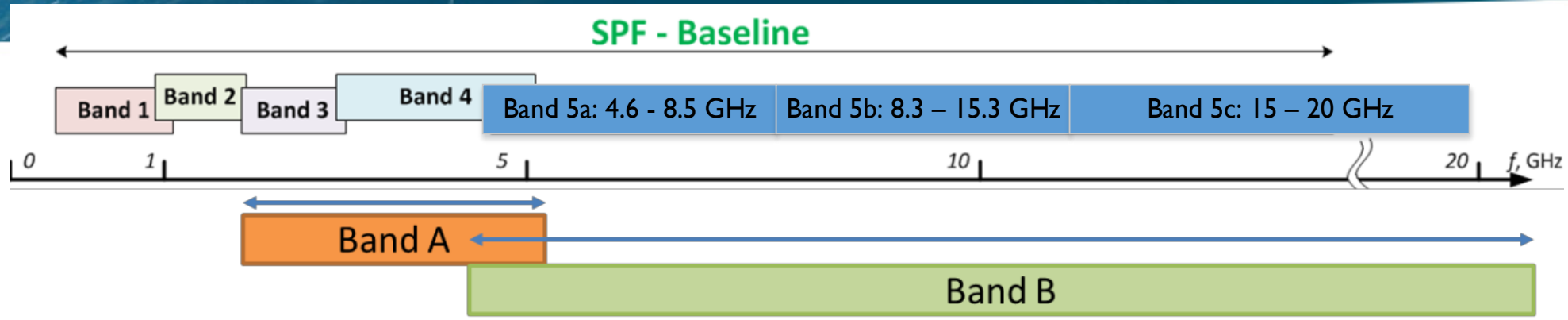

- Sensitivity requirement (Goal)
  - Band A (1.6 – 5.2 GHz) : 6.5 m^2/K ($\eta \approx 78\%$)
  - Band B (4.6 – 24 GHz): 6.1 m^2/K from 4.6 – 13.8 GHz ($\eta \approx 70\%$)
    4.7 TBC m^2/K from 13.8 – 20 GHz ($\eta \approx 65\%$)
    3.5 TBC m^2/K from 20.0 – 24 GHz ($\eta \approx 60\%$)
  - Polarization (IXR) better than 15 dB over HPBW
- Sampled Bandwidth
  - Band A: 1 x 3.6 GHz @ 12 GSPS for each pol., 6 bit
  - Band B: 2 x 2.5 GHz @ 50 GSPS for each pol., 3 bit

WBSPF block diagram diagram

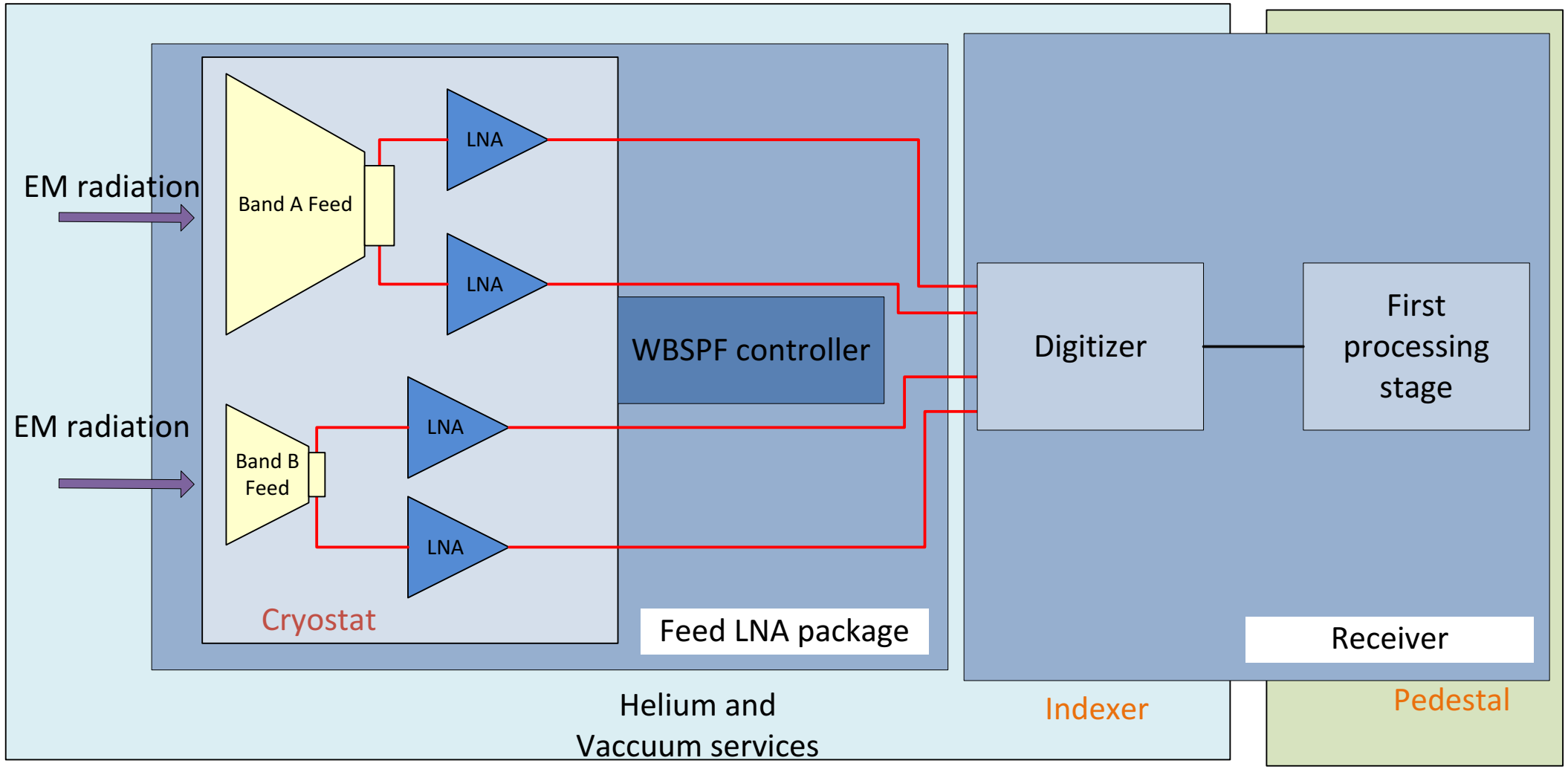

Progress update

Band A LNAs

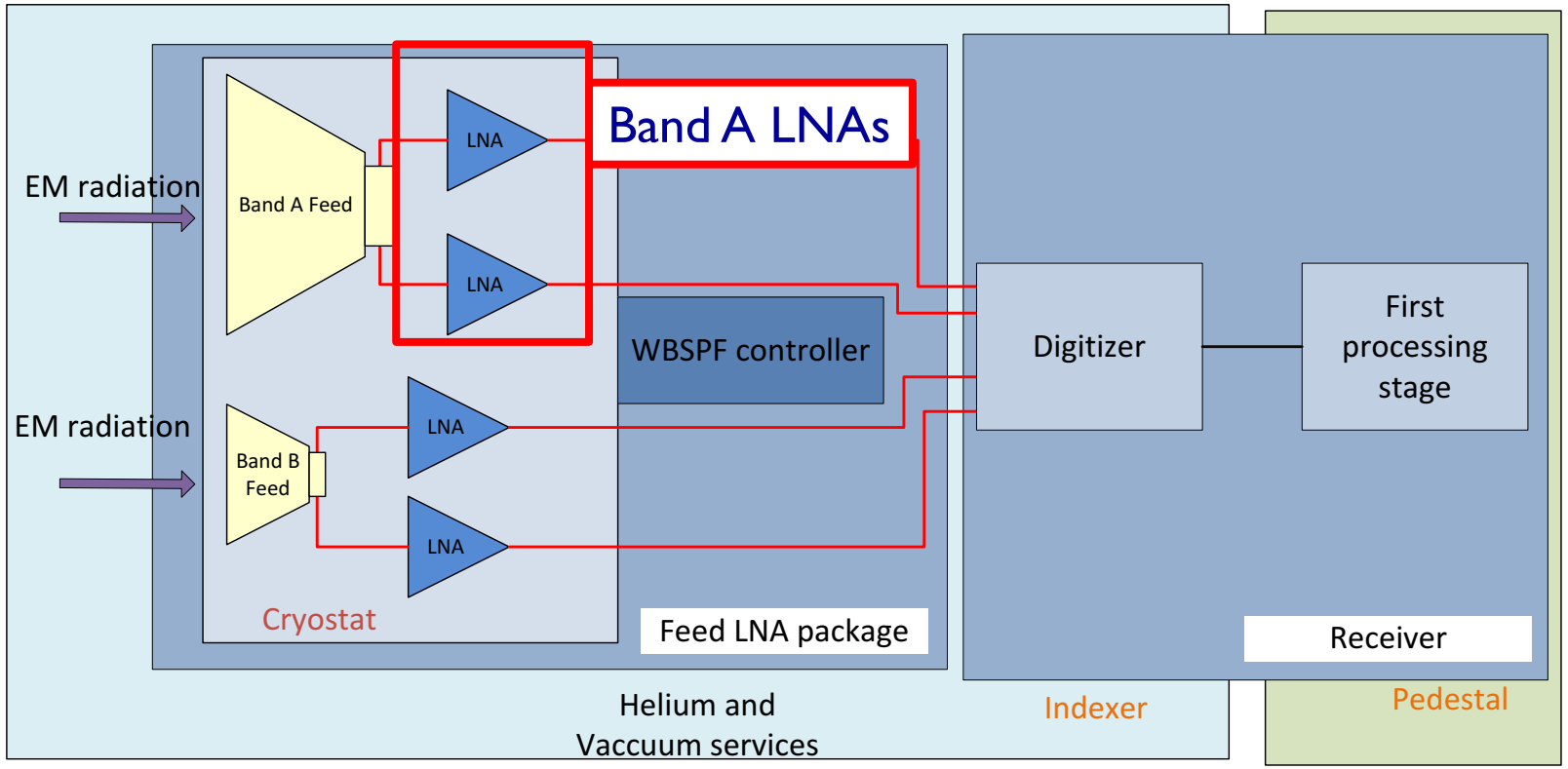

- SiGe transistor LNAs designed at Caltech
- InP HEMT LNAs from Low Noise Factory

Design of WBSPF Band A LNA at Caltech

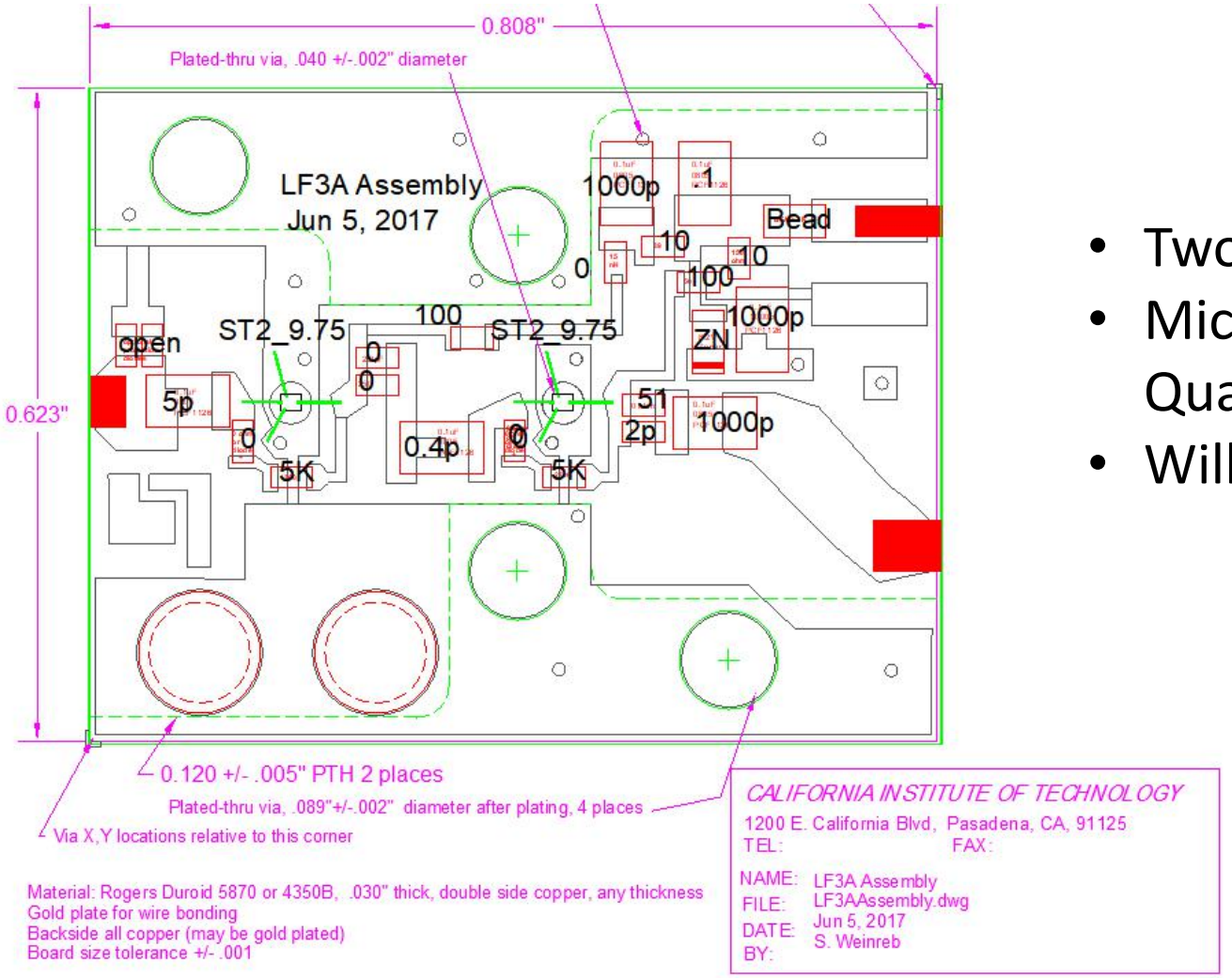

- Two stage LNA Utilizing ST SiGe Chip Transistors
- Microstrip PCB Construction Suitable for Quantity Manufacture
- Will be assembled and tested In June, 2017

Design of WBSPF Band A LNA at Caltech

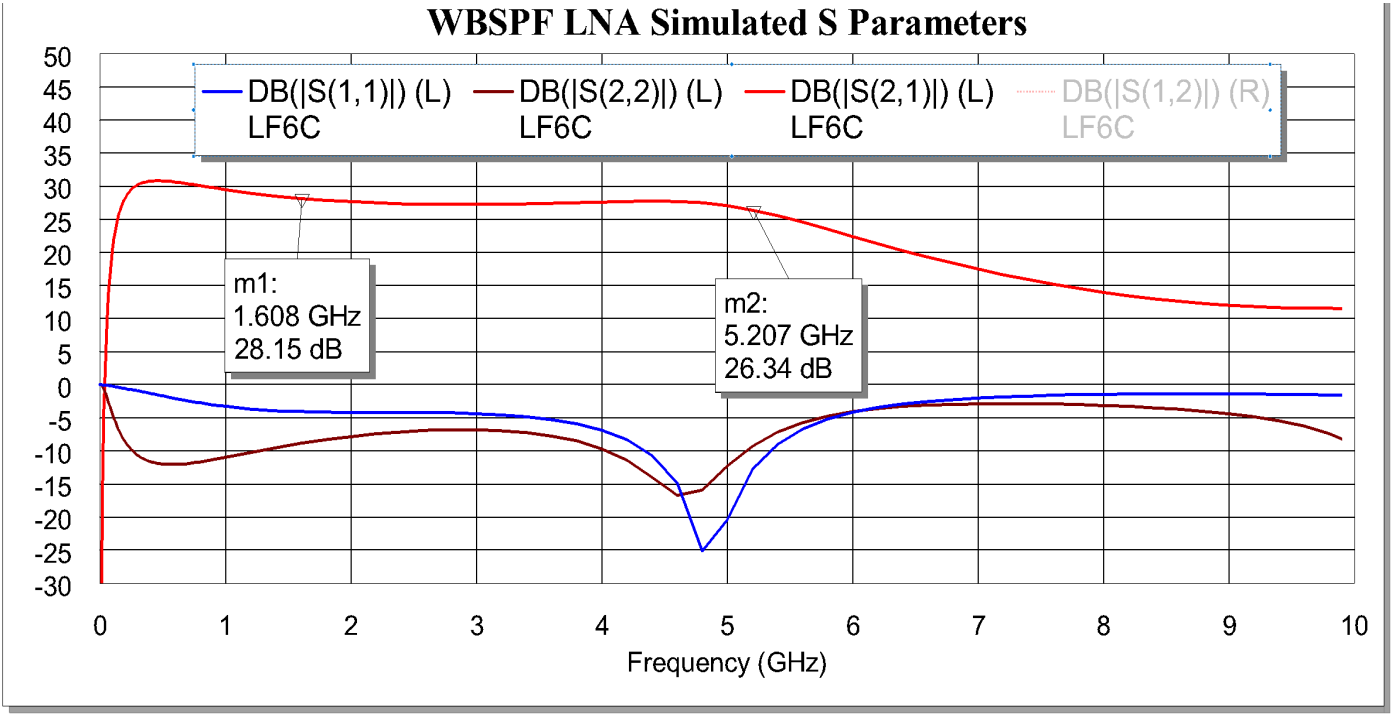

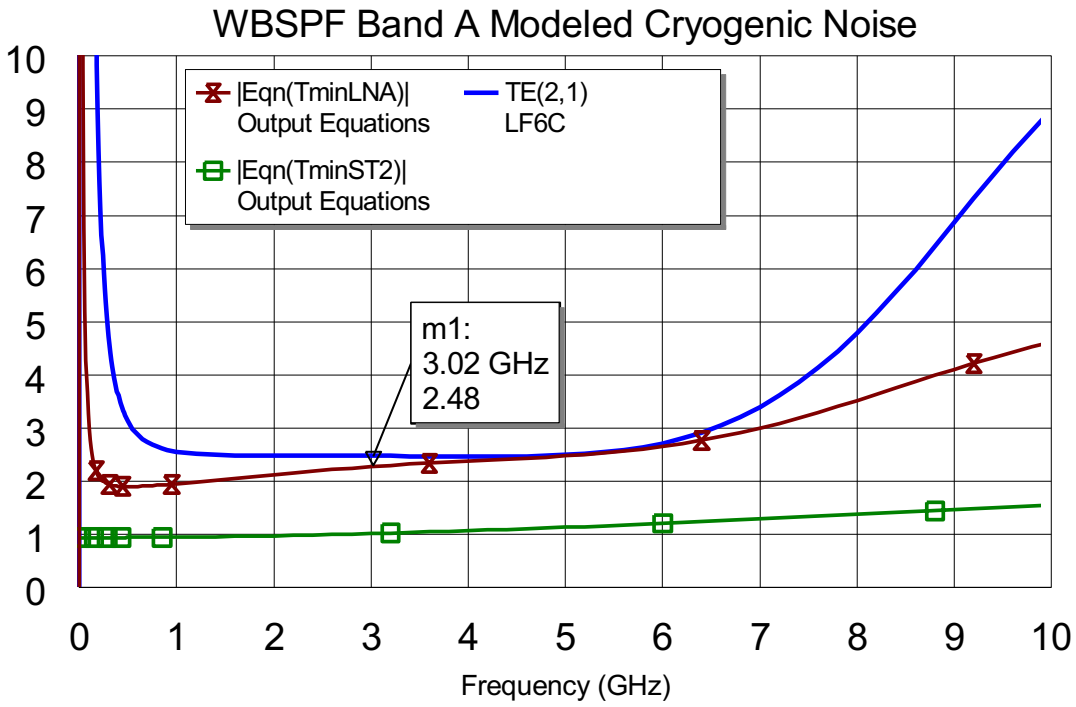

Band A
MMIC amplifiers from LNF

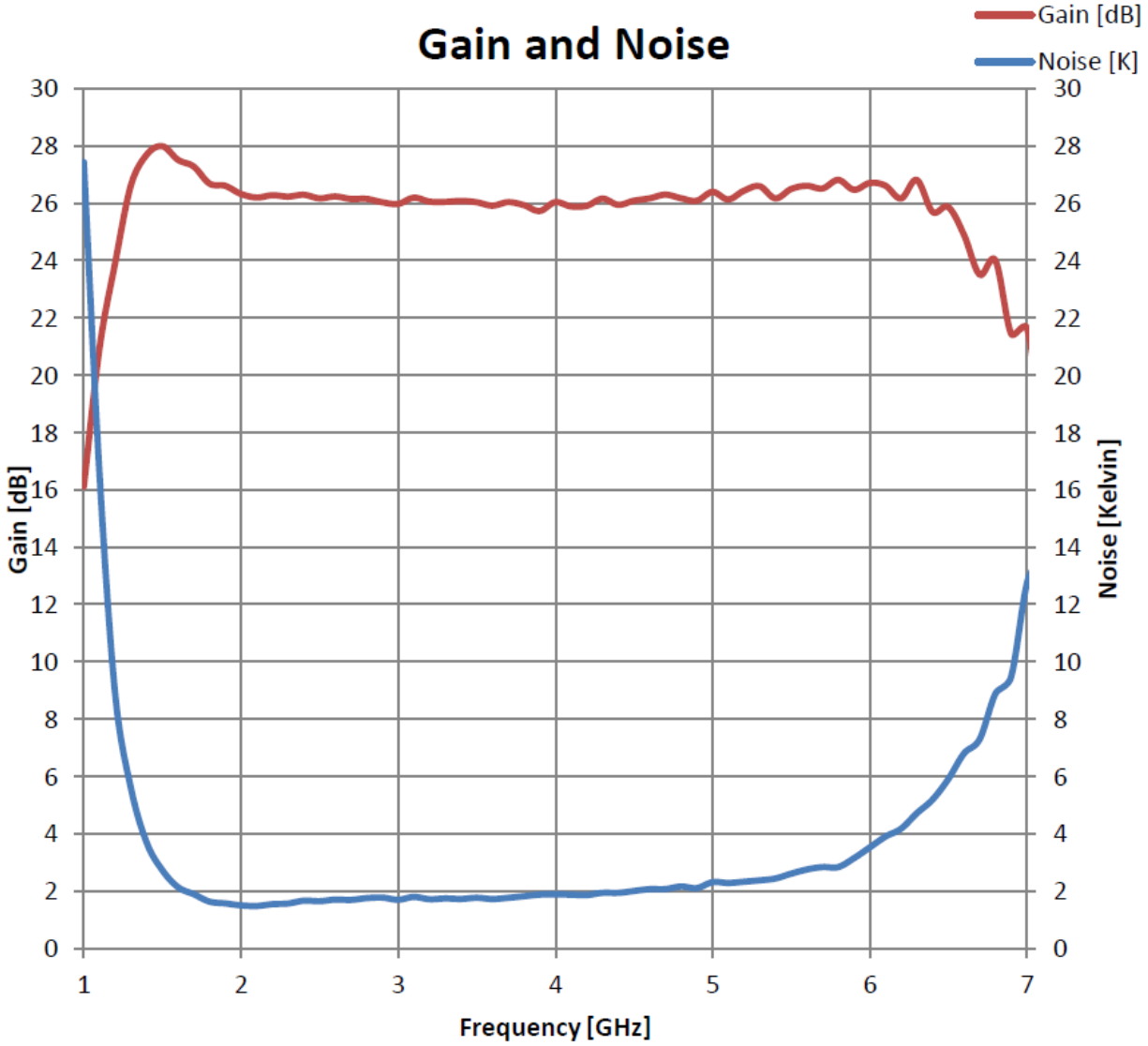

- On-shelf component.
- Lead time few weeks
- Price for single unit is around 4 500 Euro

Band A Feed

Design by Niu Chuangfeng et al.

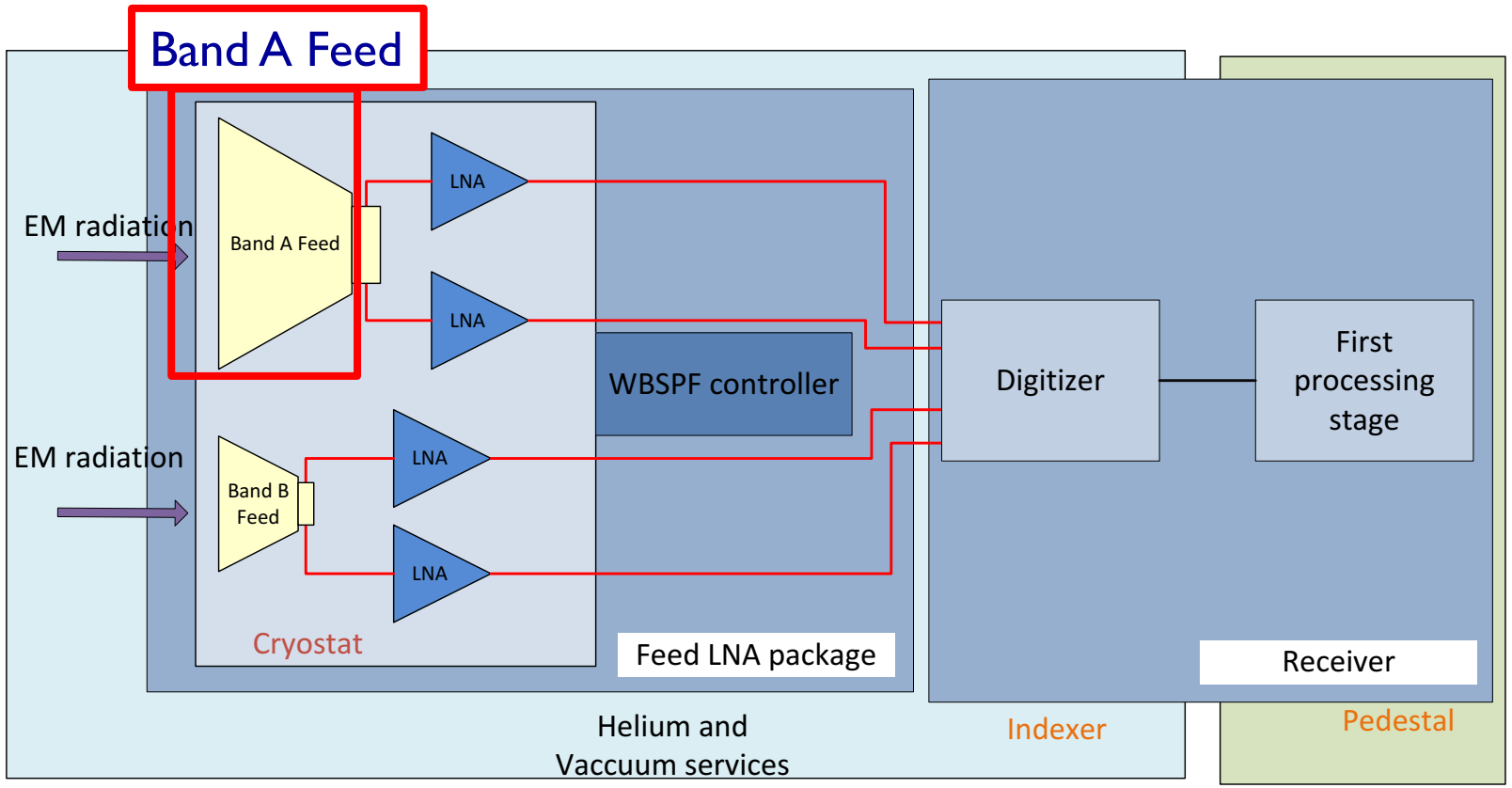

The feed with thin ridges has been manufactured, the measured far-field pattern is fine,

Return loss is not very good.

New design with thick ridges has been simulated.

The manufacture of the new feed is expected to be started in two or three weeks.

Band A Feed

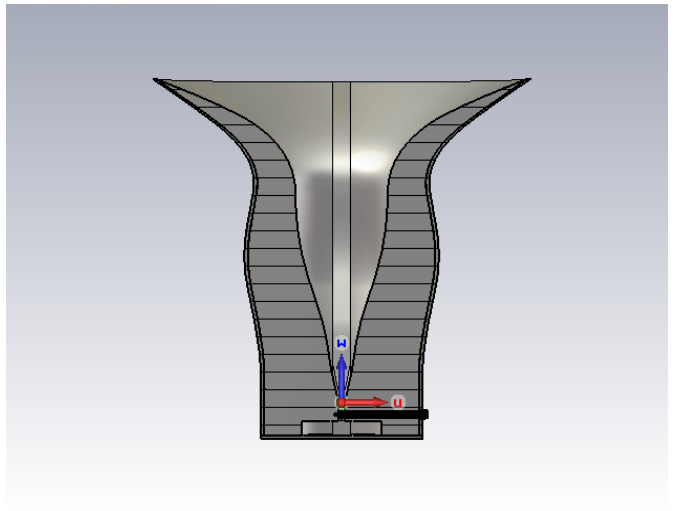

QRFH Feed: 1.6-5.2GHz

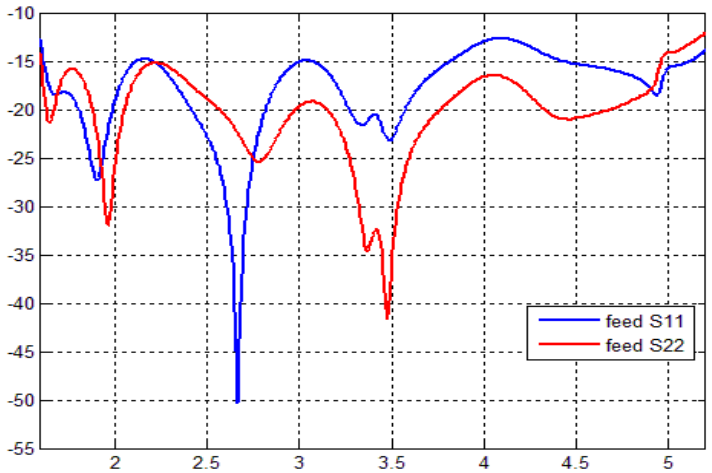

Return Loss of two pols

The aperture efficiency of the Feed on the 15m SKA dish.

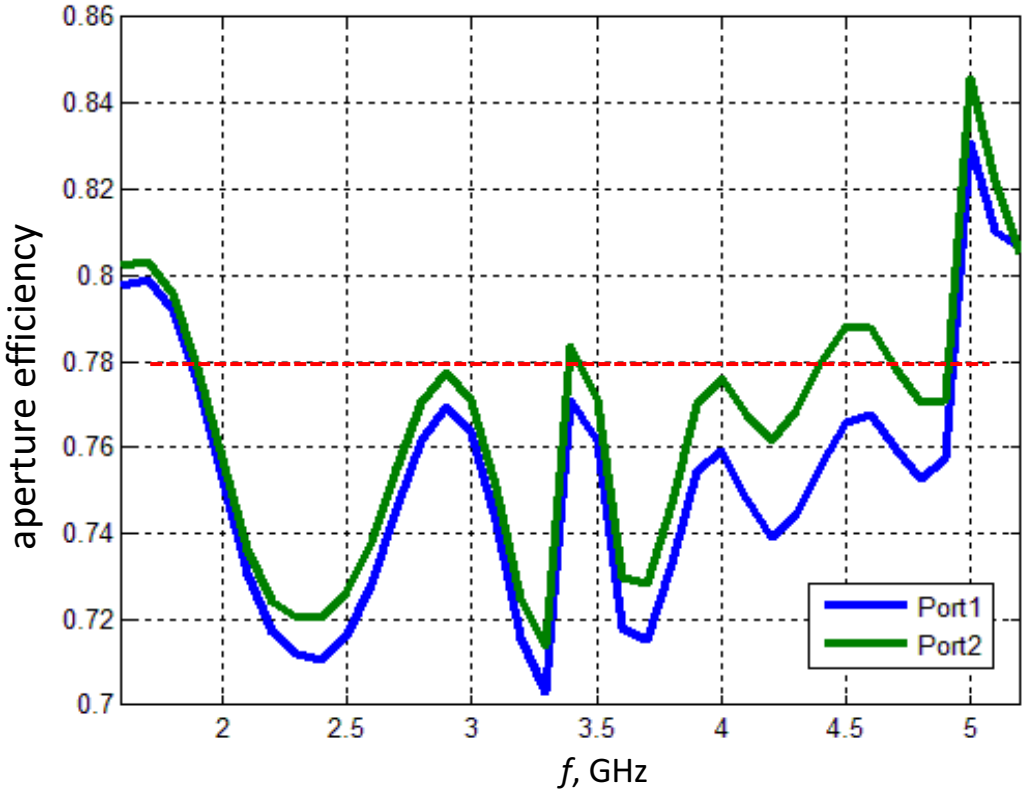

- The diameter of the feed aperture is ~ 215mm, the height is ~ 195mm).
- The S11 of two pols are below -12dB.
- The aperture efficiency is ~ 70% - 80%.

Band A Feed and dewar

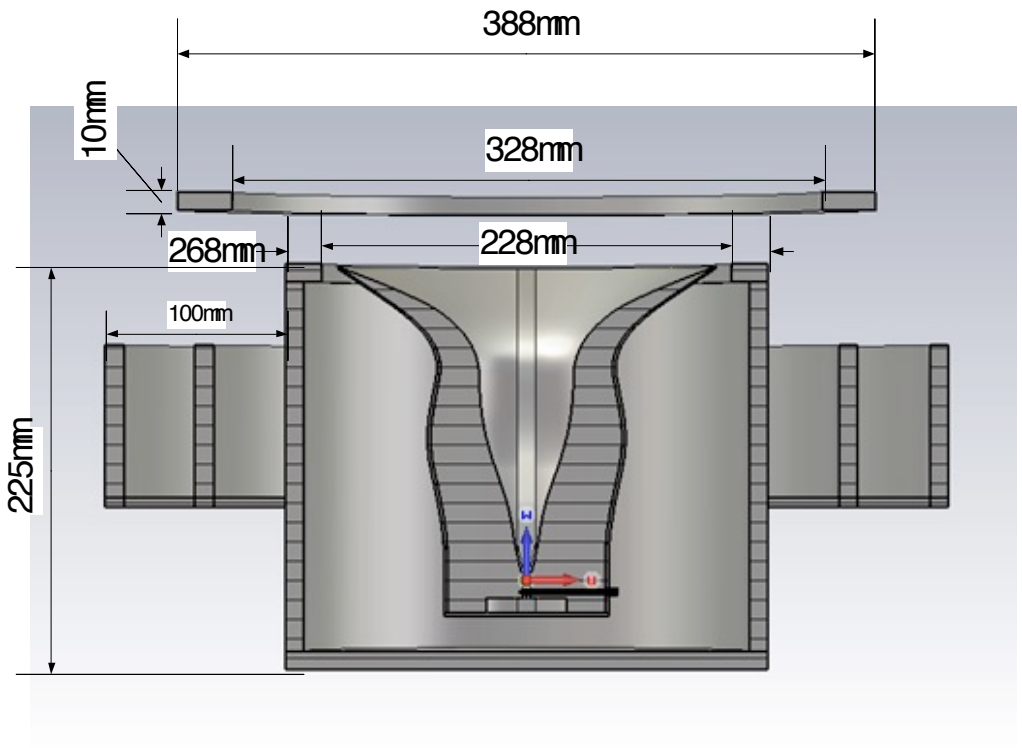

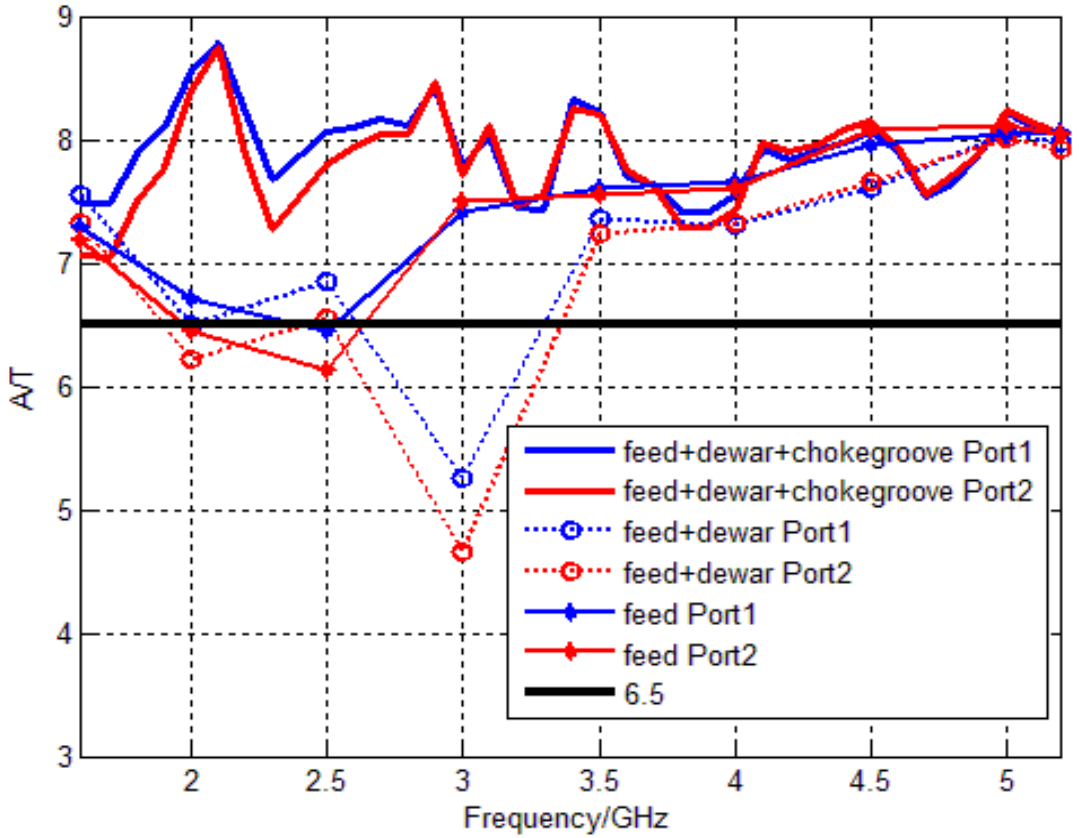

Choke ring has effectively reduce the back lobe of the feed, and enhance the sensitivity
The receiver temperature used is roughly linearly increased with frequency, varying from 10.27K @ 1.5GHz to 14.77K @5.5GHz.

Band B LNAs

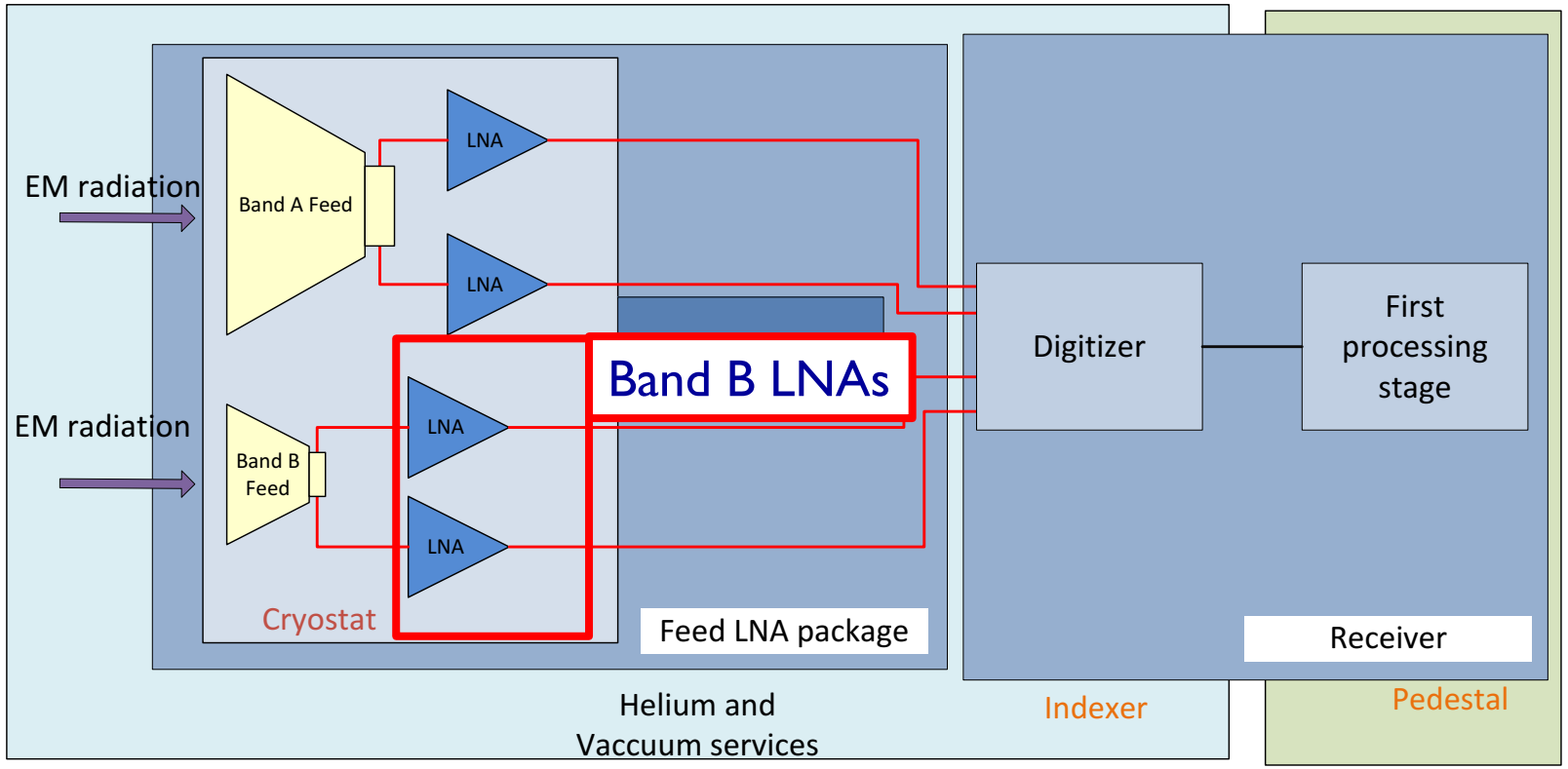

- InP HEMT LNAs from Low Noise Factory.
- On-shelf component.
- Lead time few weeks.
- Price for single unit is around 4 500 Euro.

Band B
InP LNA

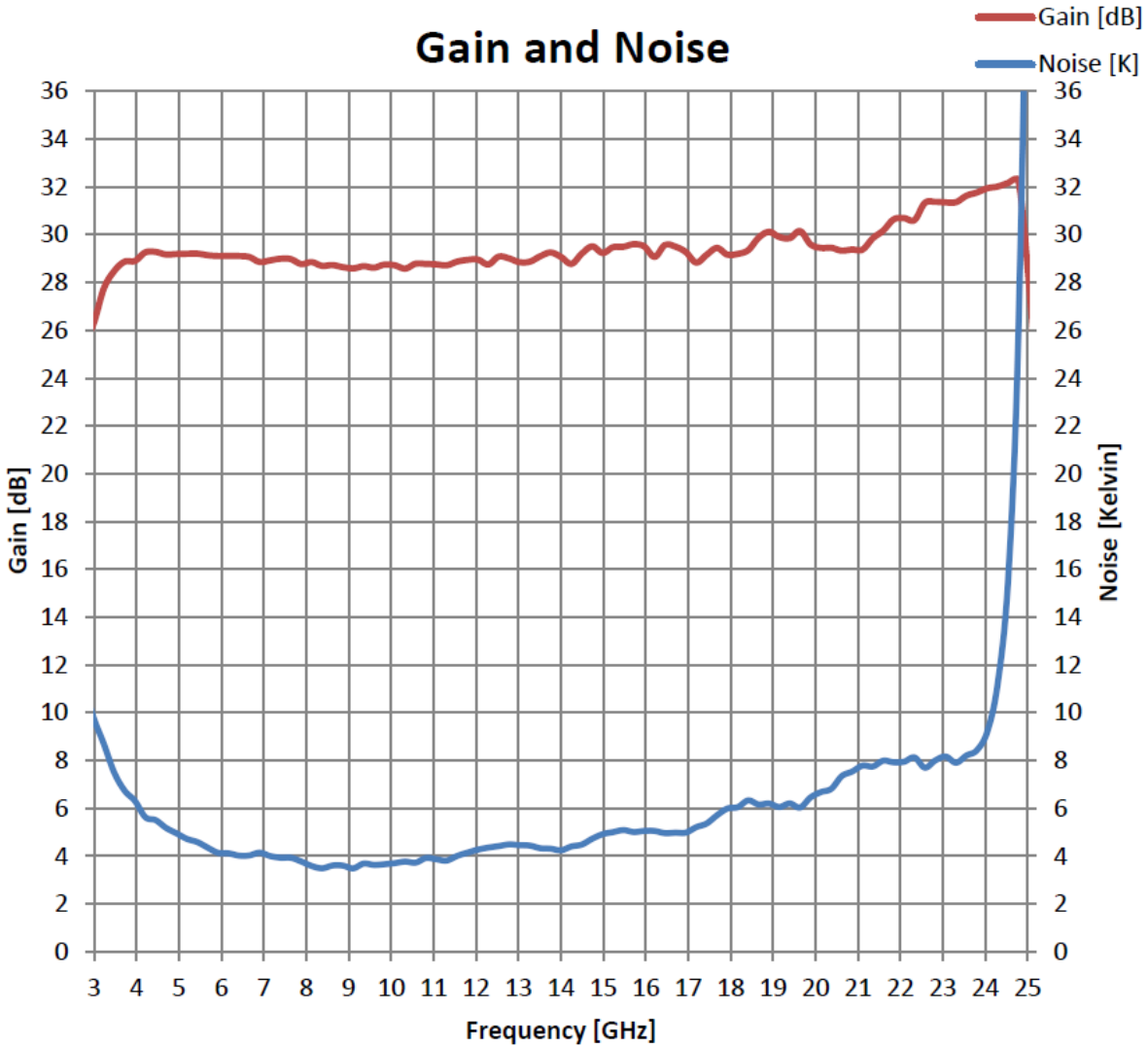

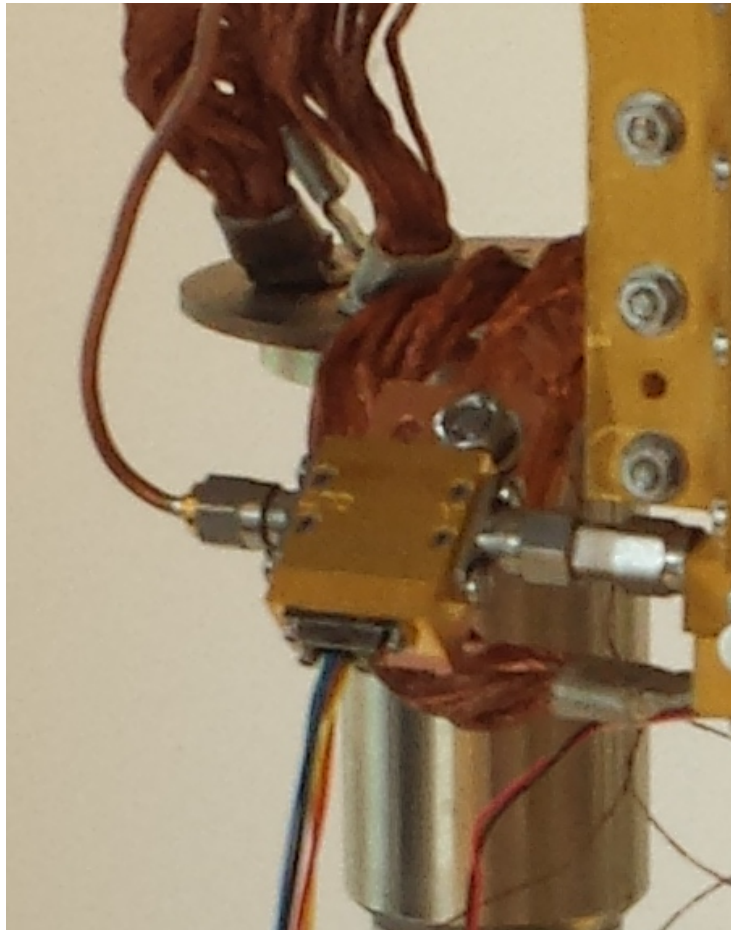

Band B Feed

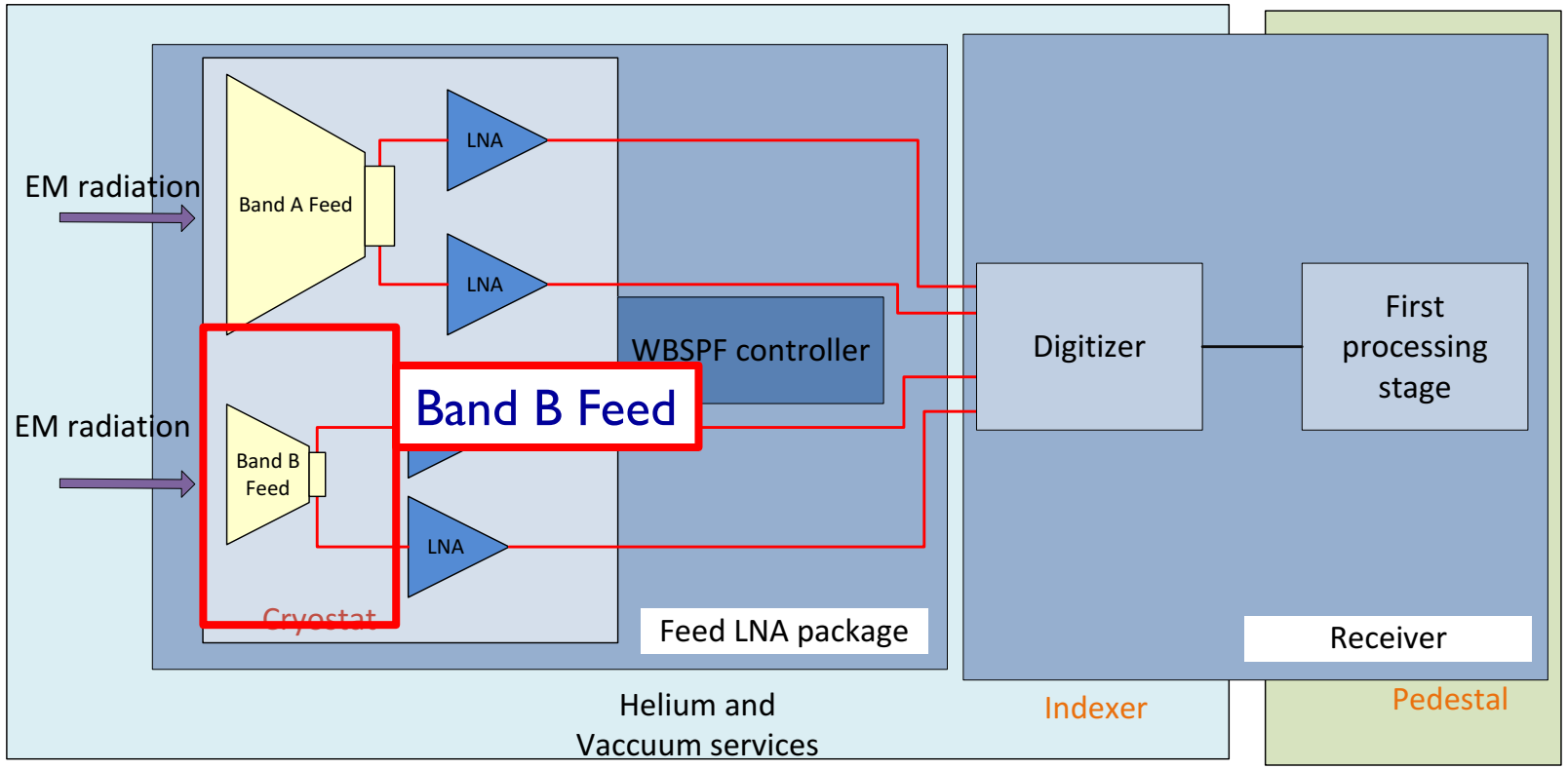

Current status

- Prototype manufactured
- Measured beam patterns
- Measured T_receiver

Band B Feed Efficiency in SKA dish calculated from measured beam pattrens

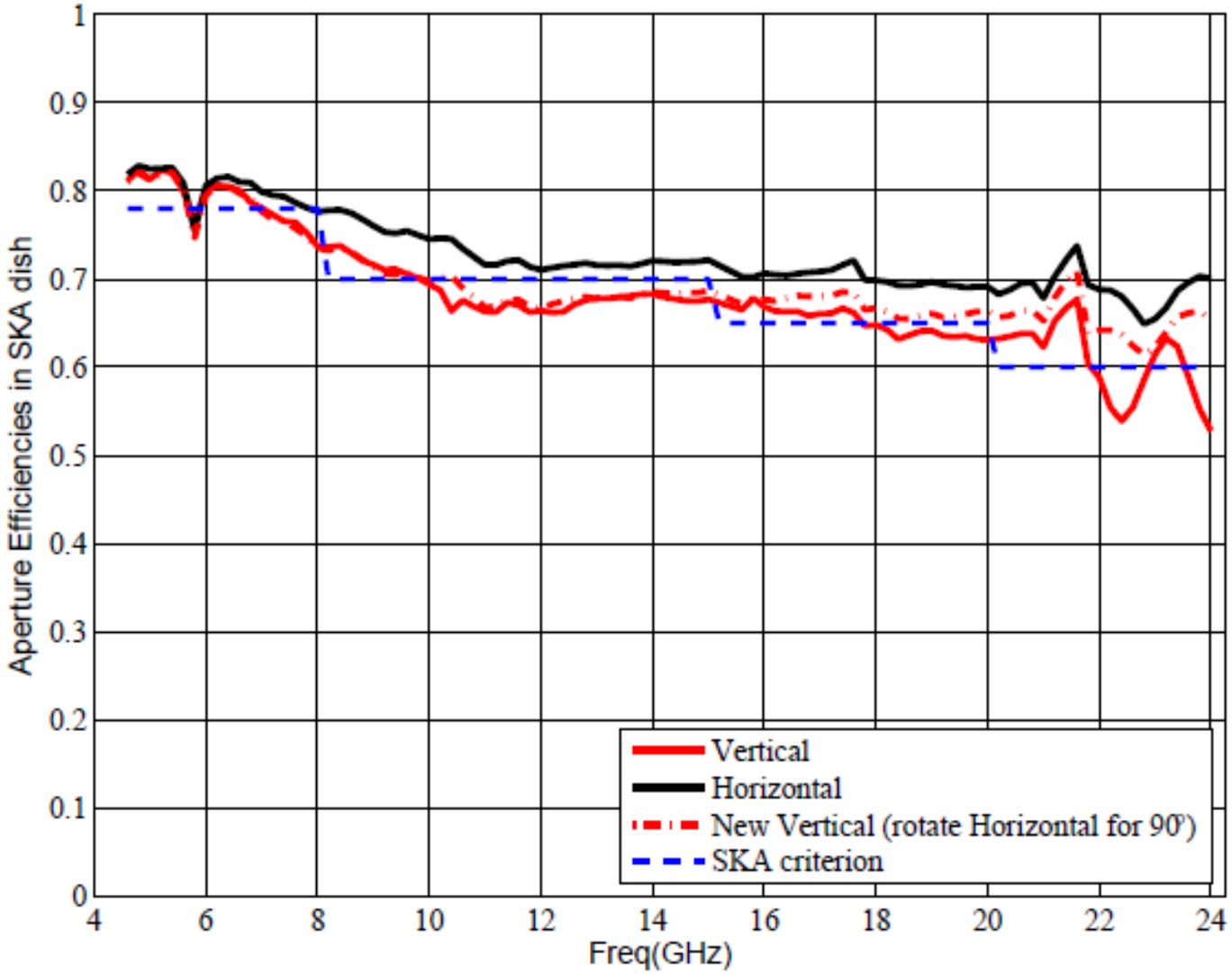

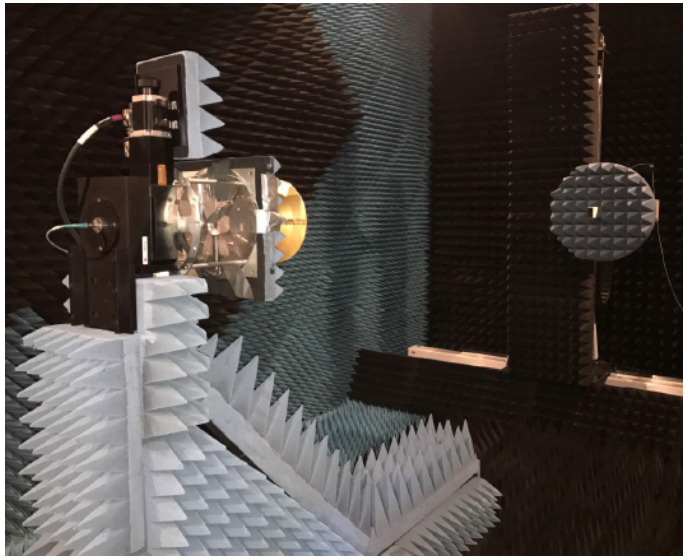

Measured Y – factor with Band B feed and LNA

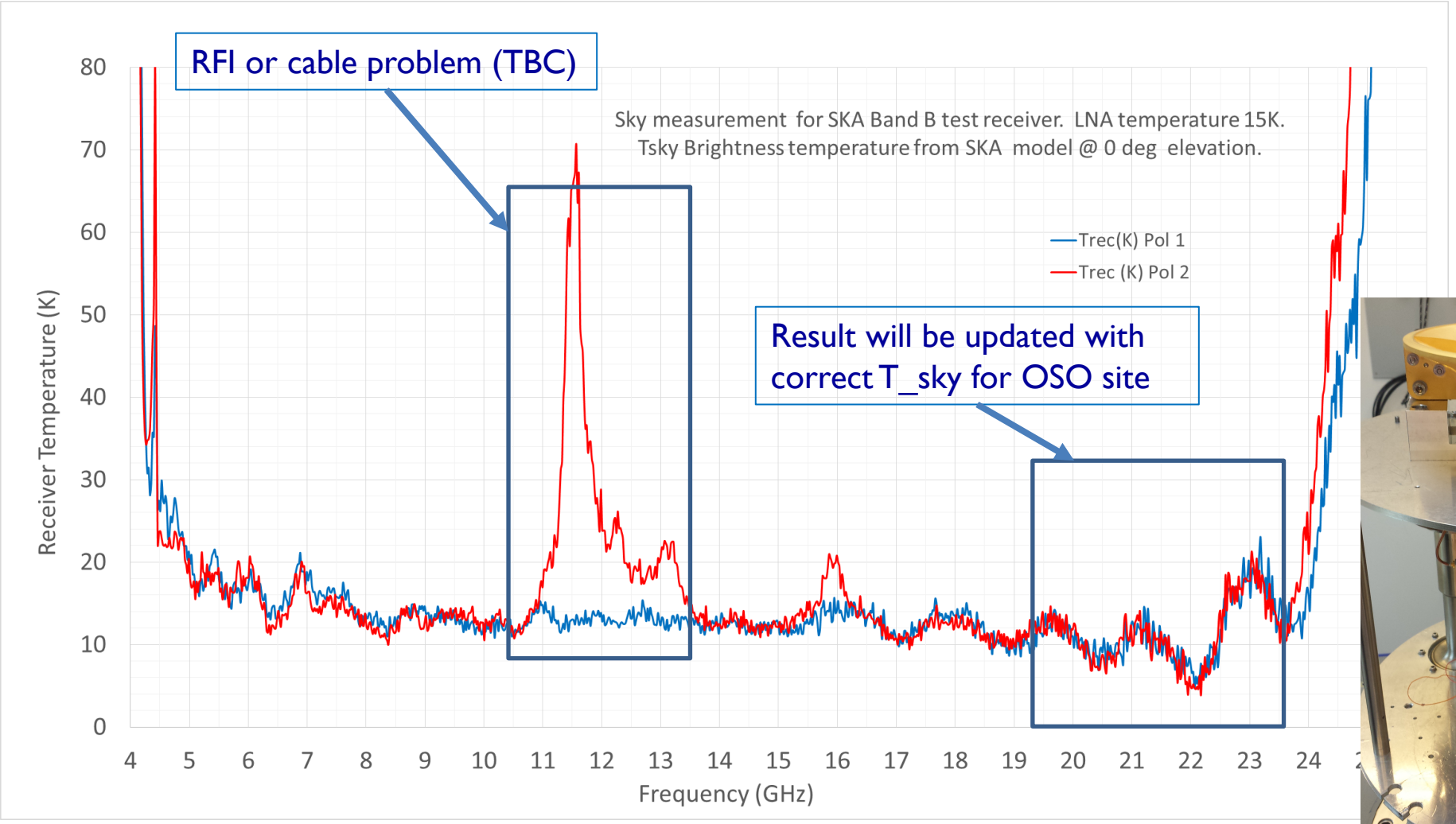

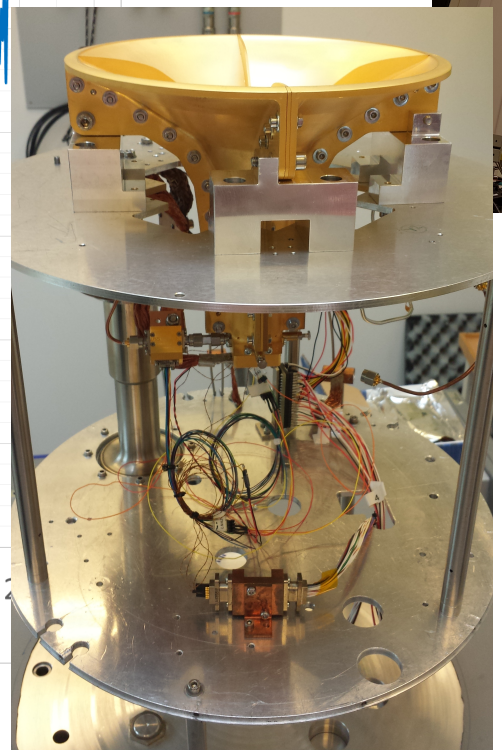

Sensitivity calculated with measured beam paterns and measured T_rec

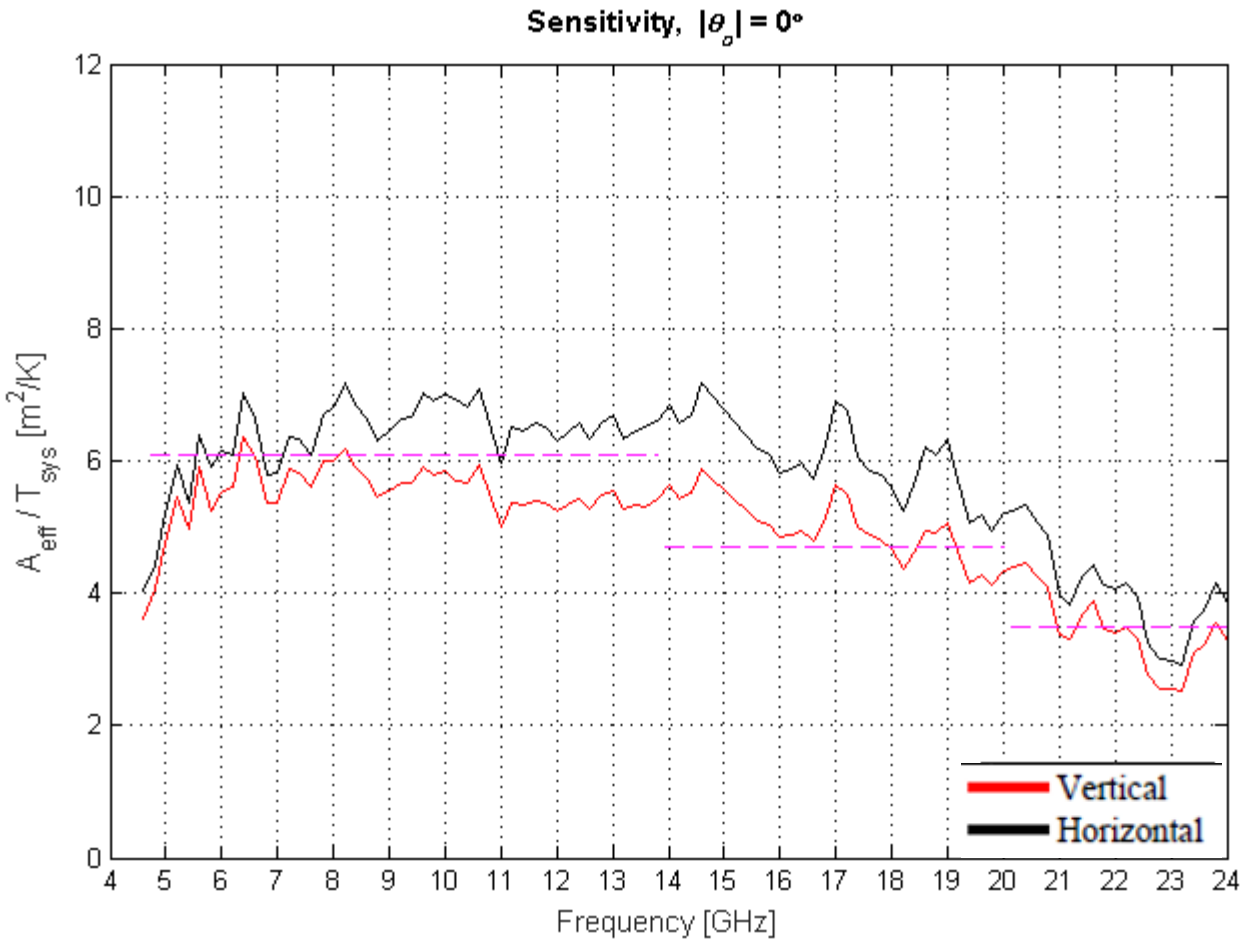

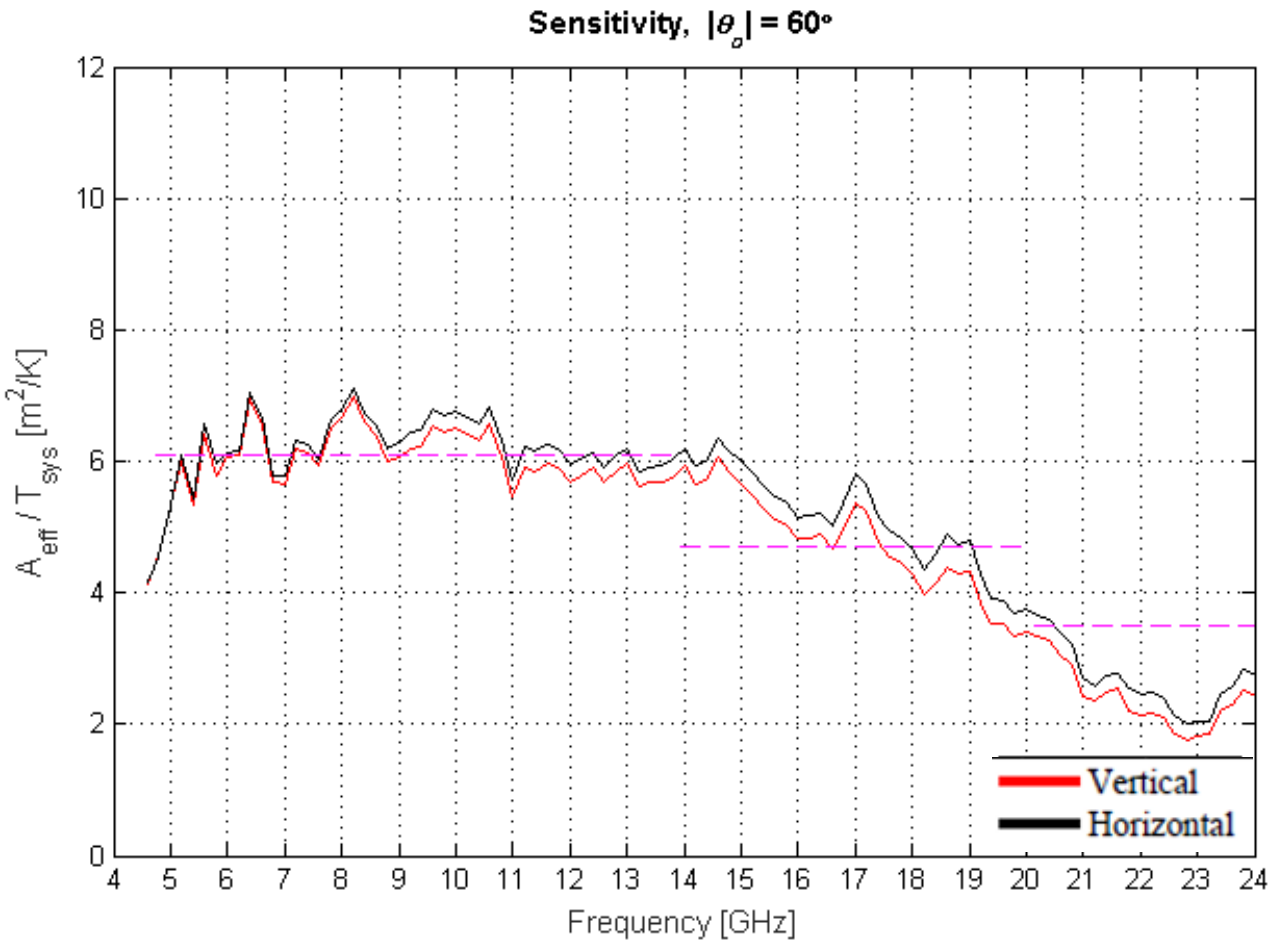

Cryostat

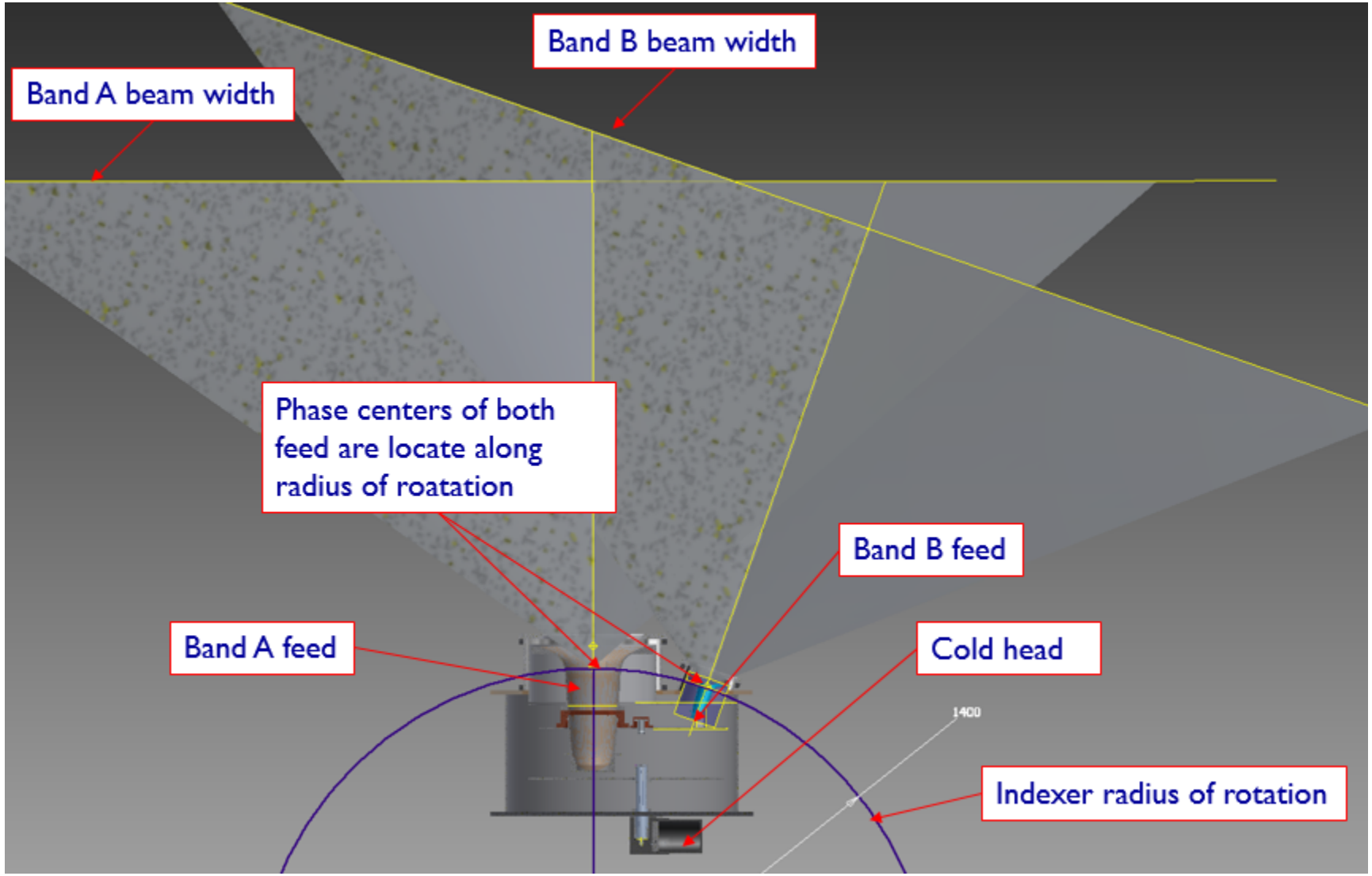
Band B beam width
Band A beam width
Phase centers of both feed are locate along radius of roatation
Band B feed
Band A feed
Cold head
1400
Indexer radius of rotation

Cryostat design alternatives

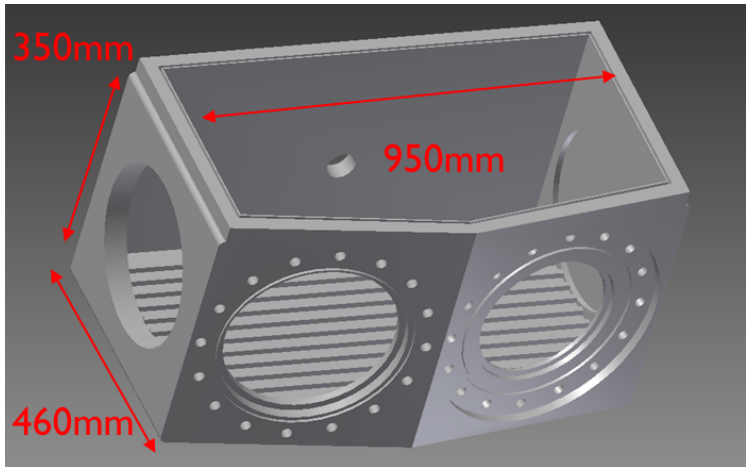

Original “single-body” concept

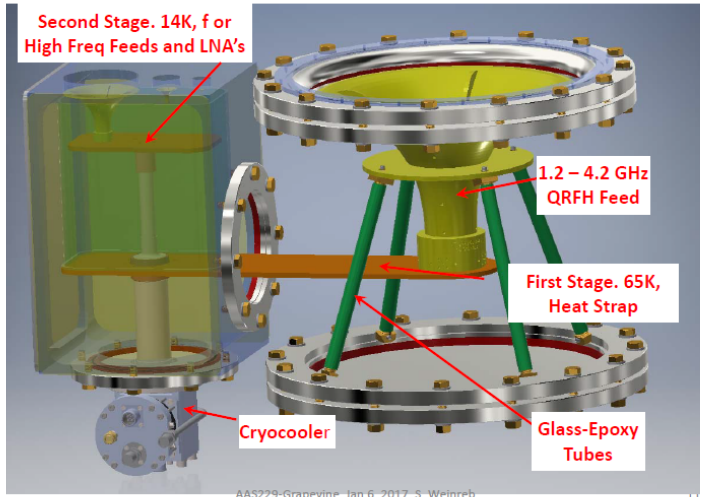

Sandy’s concept for NgVLA

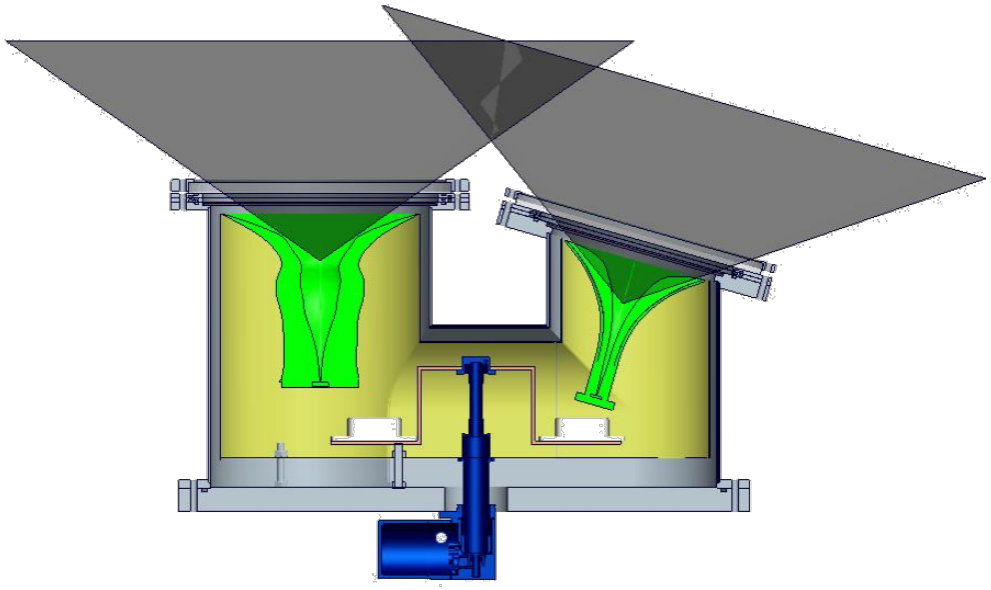

The Current Concept of the Cryostat for SKA WBSPF

The two feed are put in one cryostat
Physical temperatures T_feed and T_LNA is 20K
Vacuum window: multi-layer Mylar
The feeds, thermal shielding, LNA and other parts are mounted from the bottom of the dewar, in order to ease the installation procedure.
Thermal load optimization / minimization is still challenging to maintain 20 K with 2 W of cooling power.

Turbo Brayton Cooler prototype assembly

3D Design

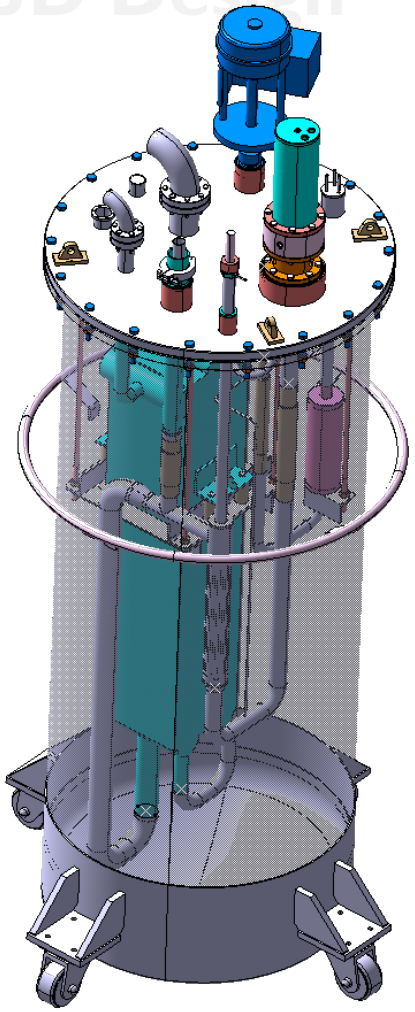

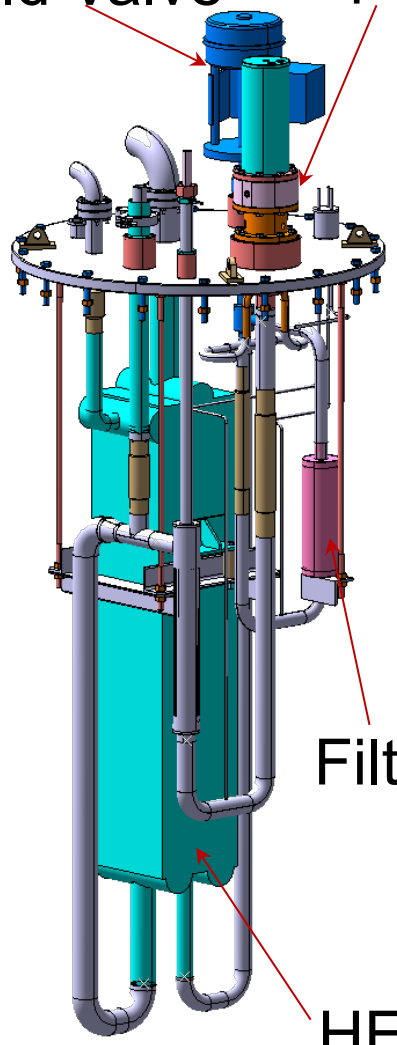

Cold Box

Turbo Expander

Receivers

Stephane Gauffre - CNRS-University of Bordeaux

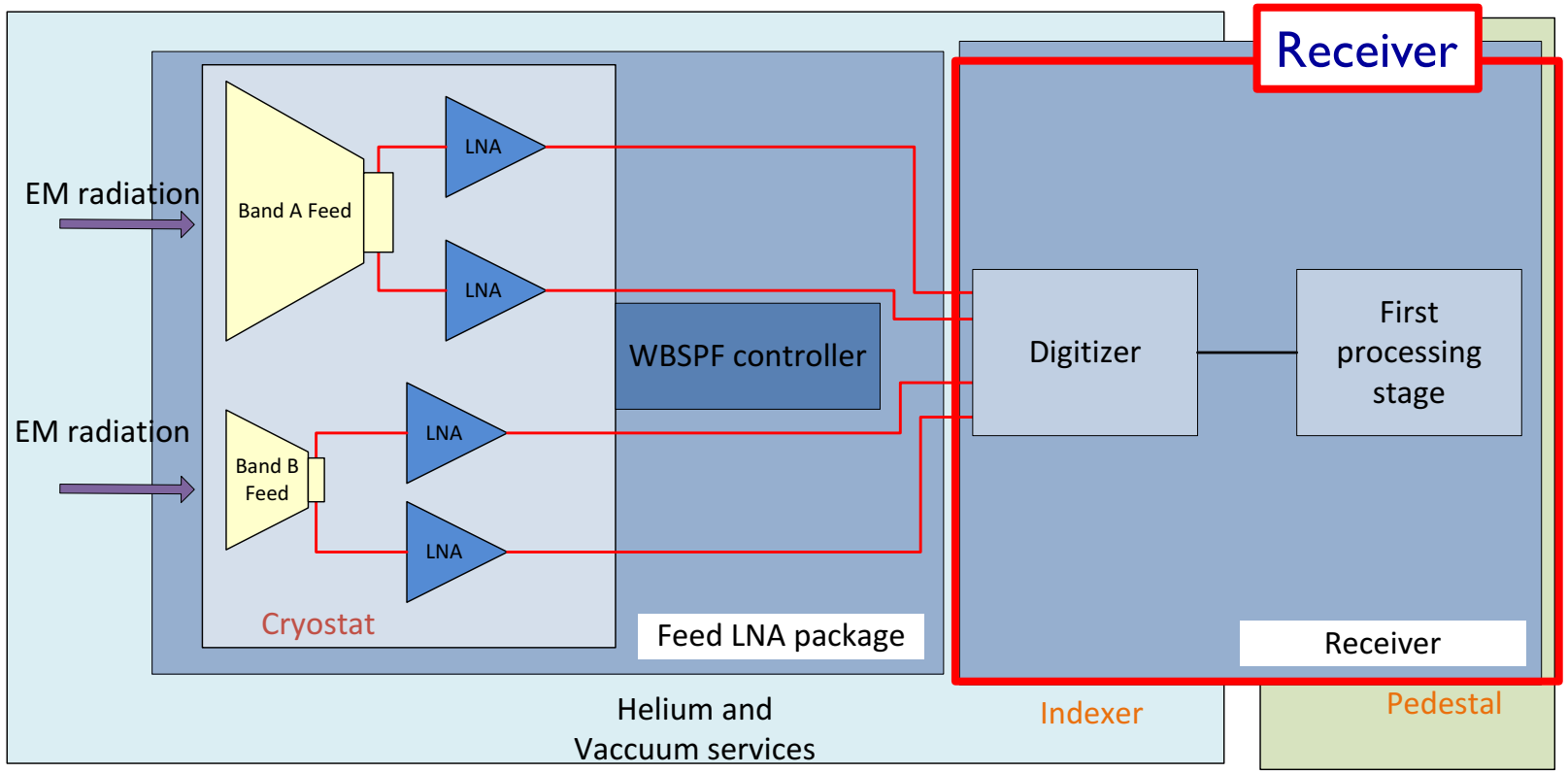

Receiver – block diagram

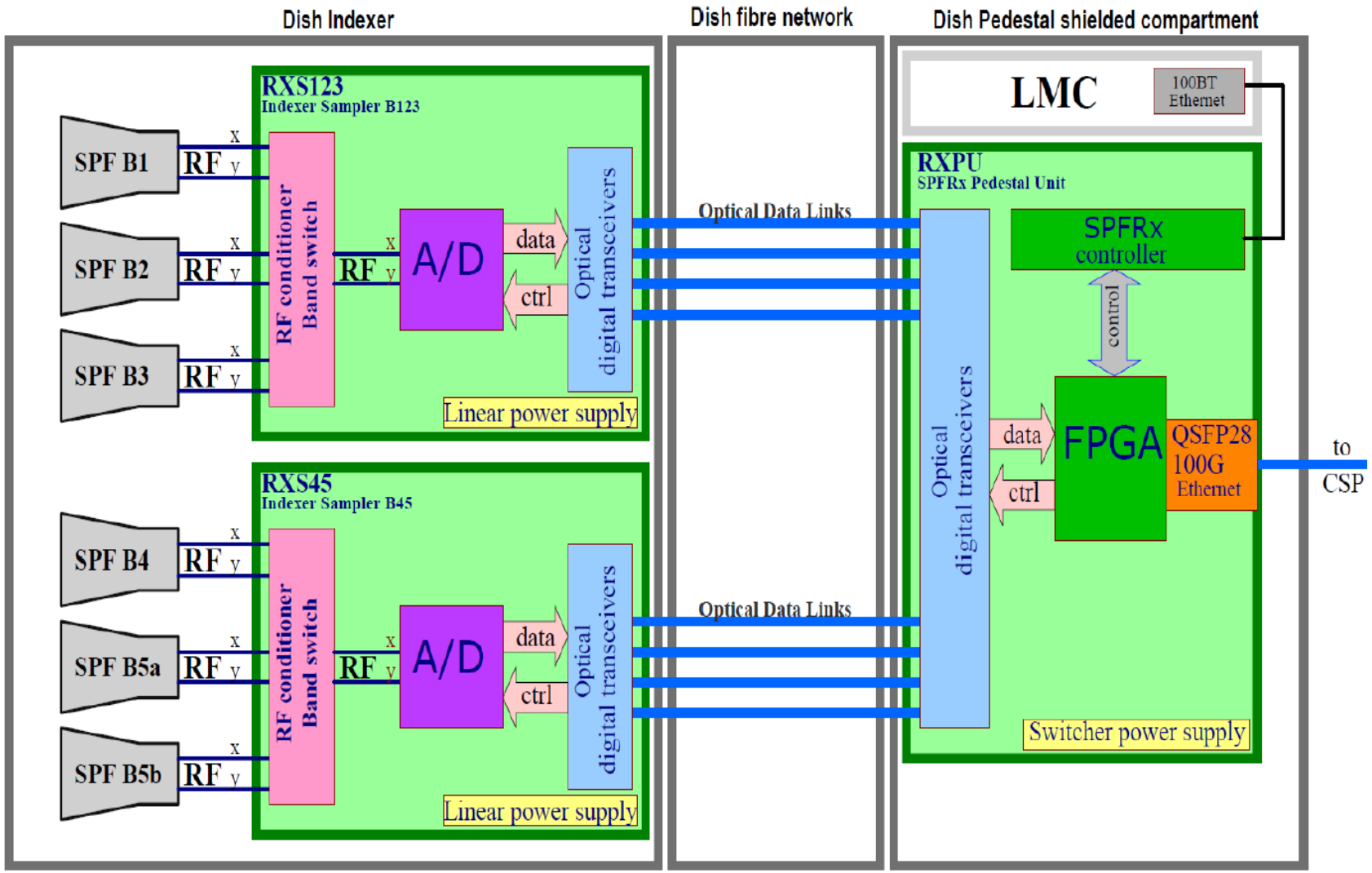

Receiver – available technology

For the first demonstrator: band B will be split into 3 sub-bands (5a, 5b and 5c).

	Freq. Range	Inst. BW	Min bit depth	Transport
Band 5a	4.6 - 8.5 GHz	3.9 GHz	3	2 × 6 GSps
Band 5b	8.3 – 15.3 GHz	7.0 GHz	3	2 × 6 GSps
Band 5c	15 – 19.5 GHz**	4.5 GHz	3	2 × 6 GSps

** limitation due to the ADC BW

- 2016: 4-bit at 10 GSps (interleaved) with FPGA for data transfer
- 2017: 3-bit at > 20 GSps (non interleaved)
- 2017+: 4-bit, 25 GHz, 25 GSps will be tested by Alphacore in March 2017
- 2018: 6-bit, 25 GHz, 25 GSps will be developped in 2017 by Alphacore and tested in 2018.
- > 2018: 7-bit, 20 GHz, 40 GSps is planned

Health and Safety

- Consortia members follows the countries applicable laws in the day-to-day work.
- Identify any hazards that design may be present during the design, and mitigate possible implication on testing and in construction and subsequent maintenance.
- Where possible, eliminate the hazards or reduce risk.
- Special precisions when working with vacuum, cryogenics and chemicals.
- Risk assessment for:
  - Operation of cryogenic and vacuum equipment.
  - Testing of feed in anechoic chamber and doing Y-factor tests

Future science

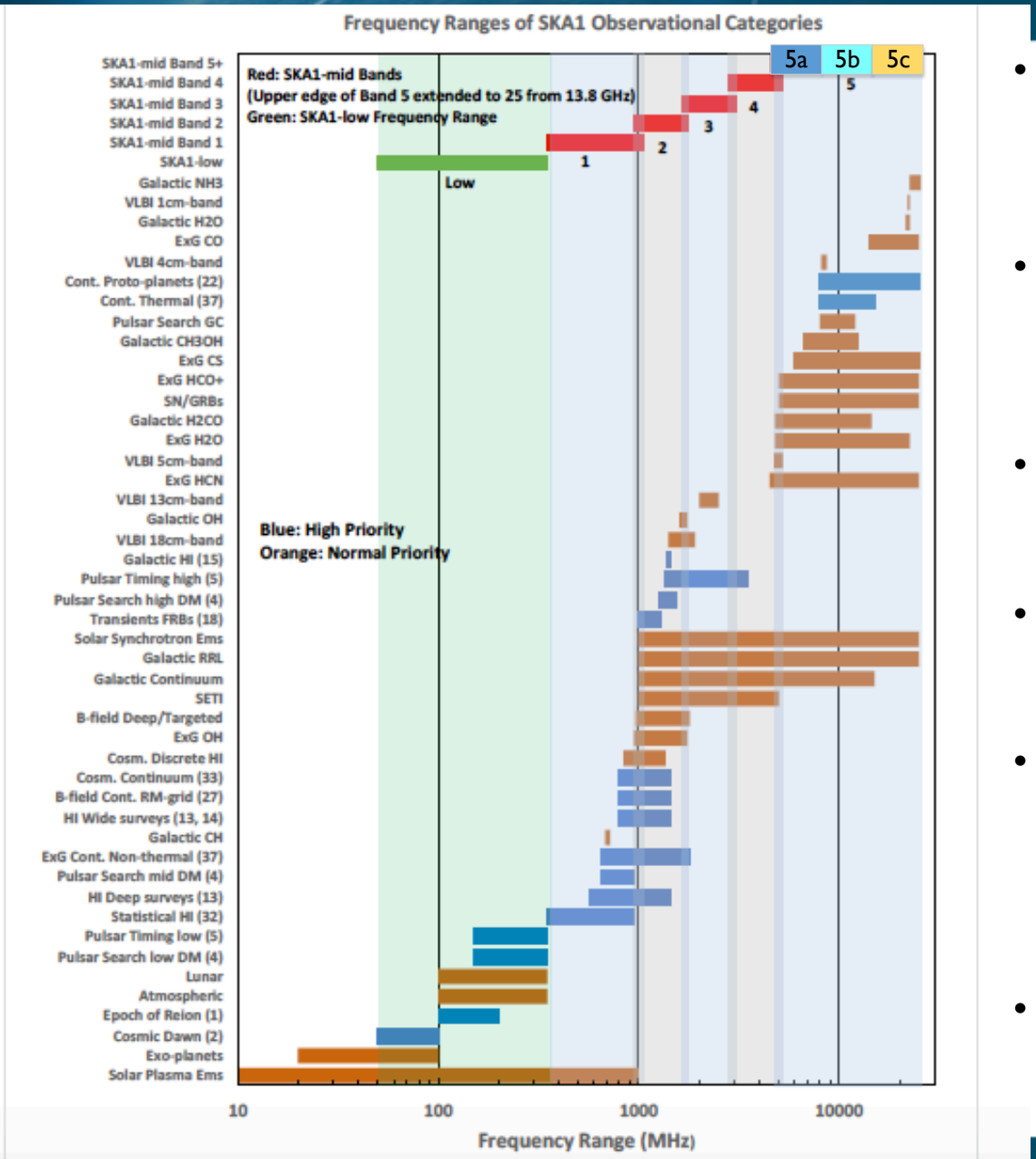

- Majority of science cases on SKA-mid –**require observations in more that one band** (Note Band 5 now divided into bands 5a,5b,5c and so most Band 5 science cases use more than one of these sub-bands).
- Hence simultaneous observations over wide frequency range as allowed by WBSPF is a **large potential observing time** advantage, despite sensitivity at a fixed frequency being 10% – 20% worse than octave solution.
- In addition note for transient sources we can get their **instantaneous spectral energy distribution** which cannot be recovered by observing sequentially with octave receivers.
- Already a WBSPF, Band1 with 3:1 bandwidth in baseline design. Plans for 1.5 – 15GHz for EVN to observe several traditional bands simultaneously.
- To exploit full advantage of WBSPF must be able to **correlate most of bandwidth of WBSPF simultaneously** –true for Band 1 now – but at higher frequency we are presently limited by IF/Correlator bandwidth of 2 x 2.5GHz. When this increases in future WBSPF then has great advantages over octave also at higher frequencies.
- High BW WBSPF then allows (1) higher sensitivity on estimating continuum flux density at a fixed frequency. (2) Spectral information, spectra index shape etc (3) Multiple spectral lines in band.

Status Summary

Summary and plans for the PDR

WIDE BAND SINGLE PIXEL FEEDS

Summary

- Technologies limitations to meet the current Band B feed spec
- There are currently no ADC able to sample the entire Band B bandwidth
- Work closely with Sandy's group at Caltech (ngVLA) on feed, LNA and cryostat design

Plans for the PDR

- Manufacture and test Band A feed – August 2017
- Manufacture WBSPF cryostat and do thermal loading tests – September 2017
- Preparation for PDR in November 2017
- Band B CDR in early 2018 – shell we plan for that?

Plans for 2018 (post PDR)

Process

- Negotiaite formation of successor of the WBSPF Consortium that will involve:
  - The current current members;
  - Companies working on cooling technologies: Bryton, Sterling etc.
  - Companies developing super fast digitisers

- Seek approval of the SKAO board for forming new AIP consortium, suggestion for name is **Advanced Single Pixel Feed and Receiver Technologies**
- Prepare and sign MoU and CA

Work Packages

WIDE BAND SINGLE PIXEL FEEDS

- ❑ Feeds
- Take Baseline Design Dish sub-elements and develop them to DDR
  - MPIs MeerKat S-band to Band 3 DDR
  - Band 4?
  - Band 5c
- Develop Band A feed to CDR
- Consider re-defining the current Band B (5:1) to 3:1 bandwidth covering Band 5b and Band 5c (8 – 24 GHz)
- ❑ Receivers
- ❑ Cooling technologies
- ❑ Control electronics
- ❑ Test on SKA-MPI dish
- ❑ Seek senergy with ngVLA on feed design

WIDE BAND SINGLE PIXEL FEEDS

Thank you
Questions?