SKA1-Mid Telescope Design

Overview of the System Design at S-CDR

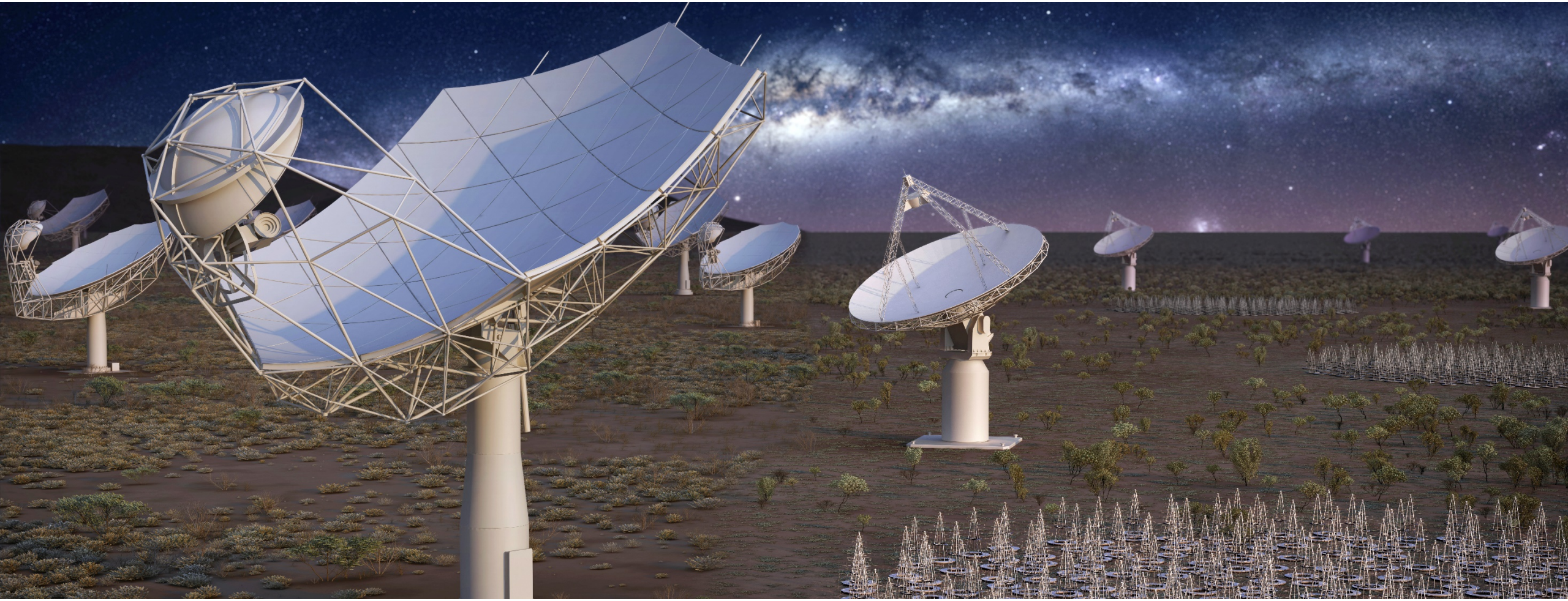

SQUARE KILOMETRE ARRAY

Exploring the Universe with the world's largest radio telescope

Gerhard Swart, et al

25 November 2019

Frequency Ranges of SKA1 Observational Categories

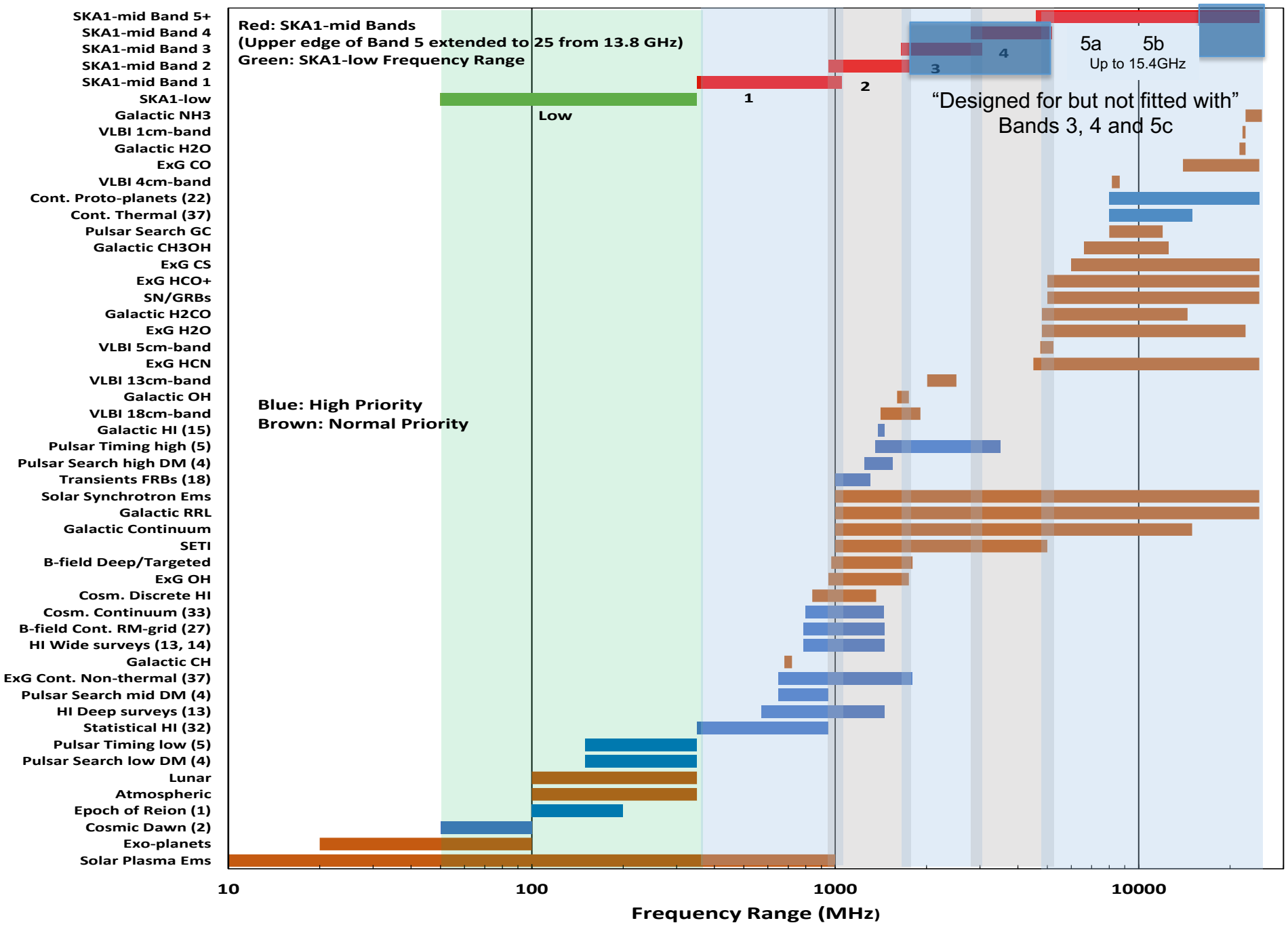

Mid Key Parameters

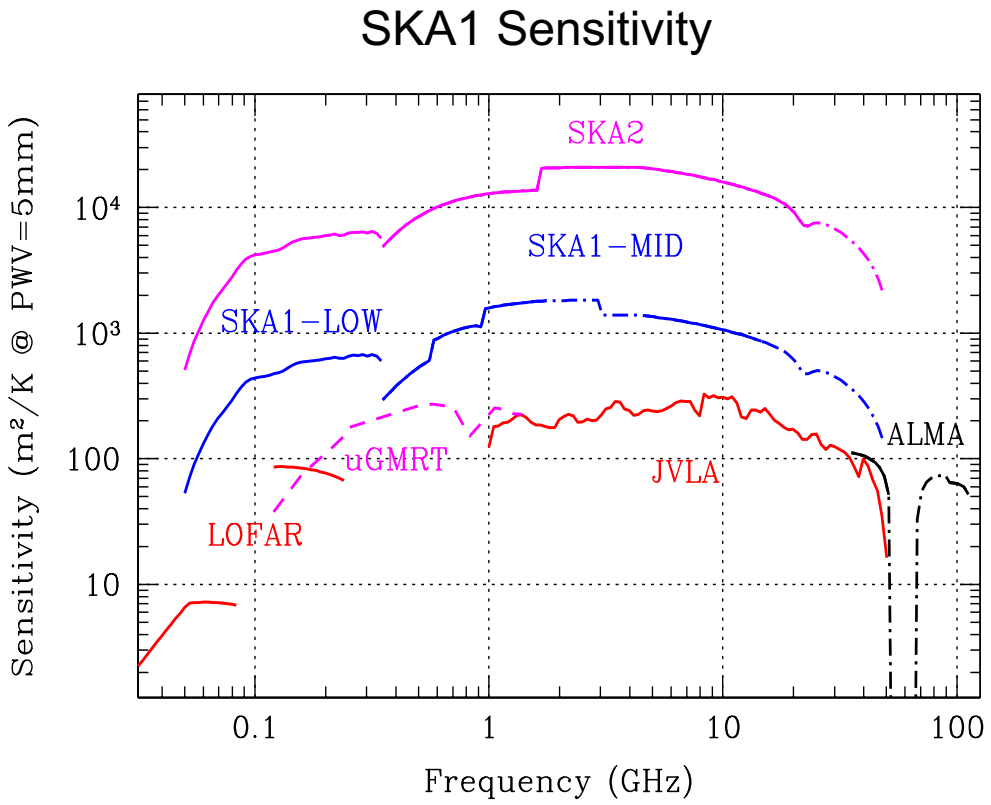

- Modes:
  - Imaging (continuum and spectral)
  - Pulsar Search
  - Pulsar Timing
  - Flow through
  - Dynamic Spectrum
  - Transient Search
  - Very-Long Baseline Interferometry (VLBI)

- High time & spatial resolution
- Flexible Scheduling
- Commensal Observing
- 95% Operational Availability

A key challenge – RFI (external & self-induced)

Example of analysis: Attenuation of emitted RFI in Central Processing Facility

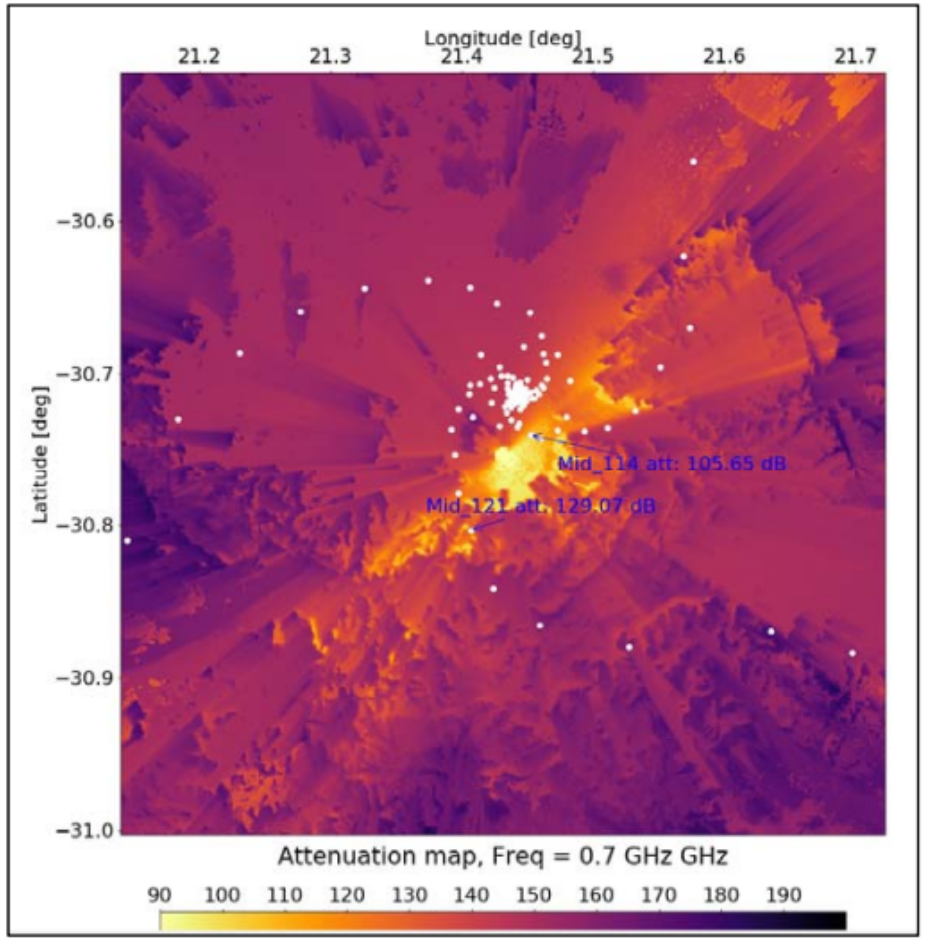

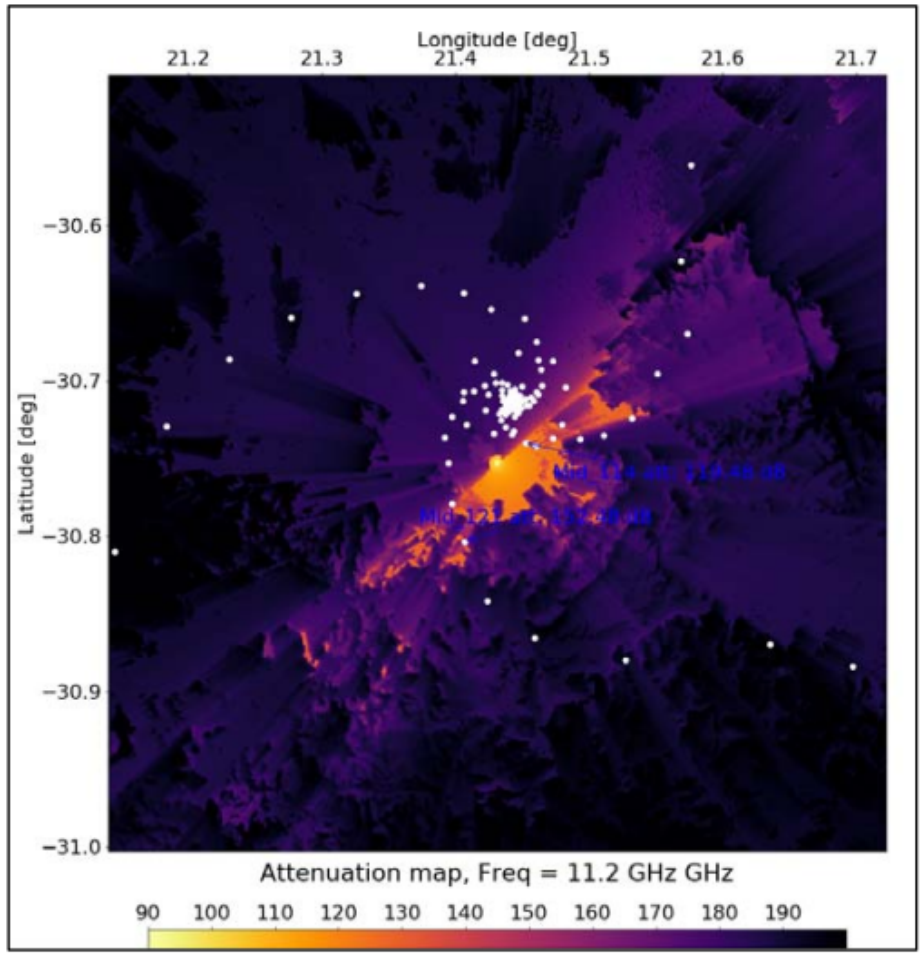

A key challenge – RFI

Example of analysis: Attenuation of emitted RFI in Central Processing Facility

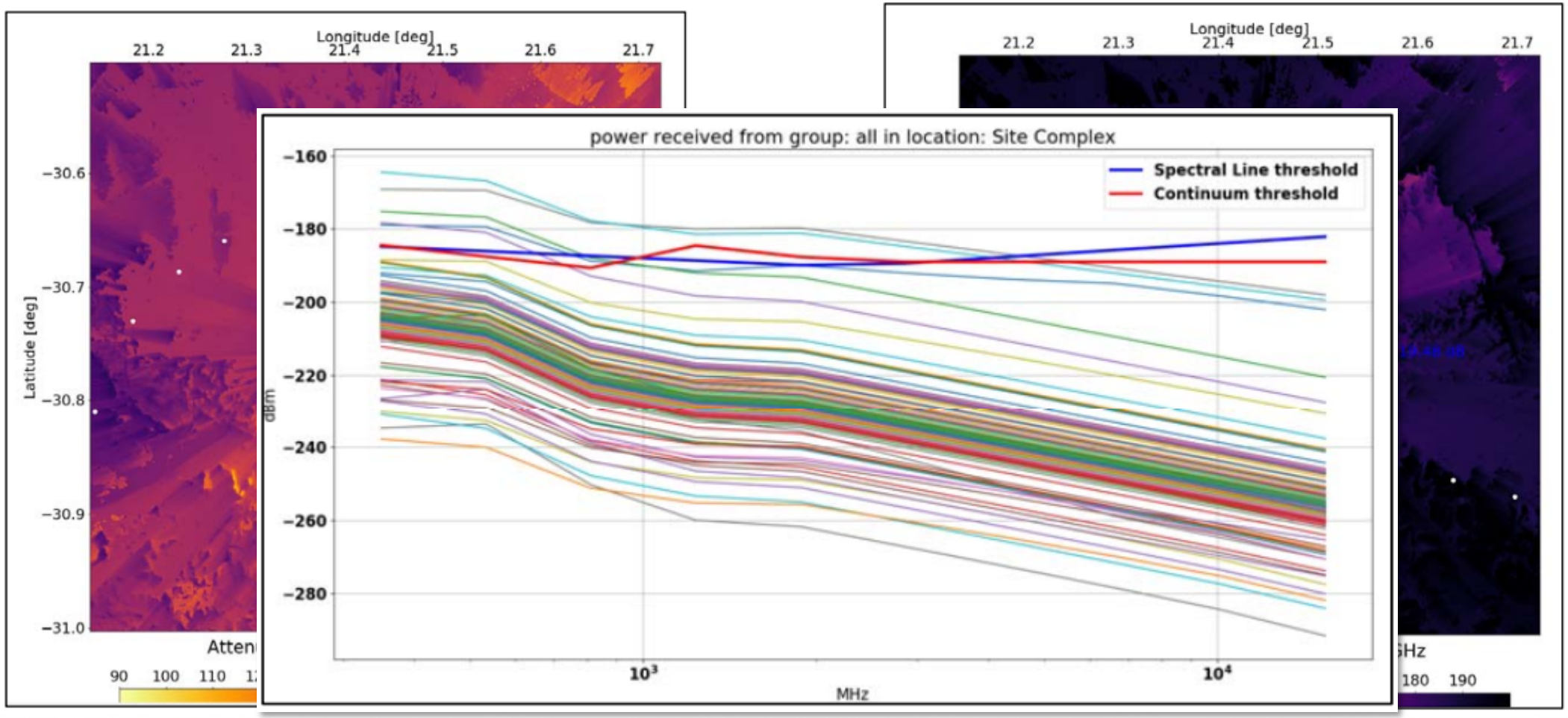

SKA – Mid Pre-cursors on Mid site

KAT-7

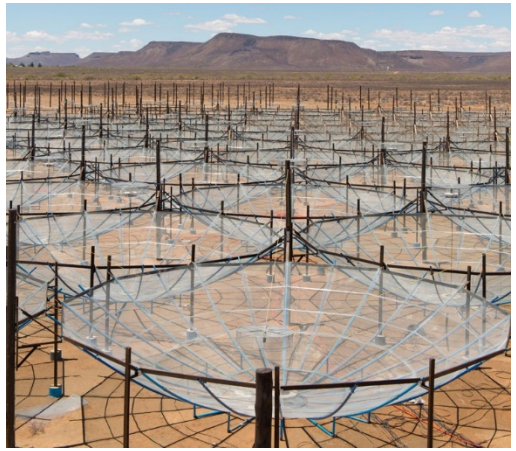

HERA

MeerKAT

Use MeerKAT antennas and infrastructure

Signal and processing chain

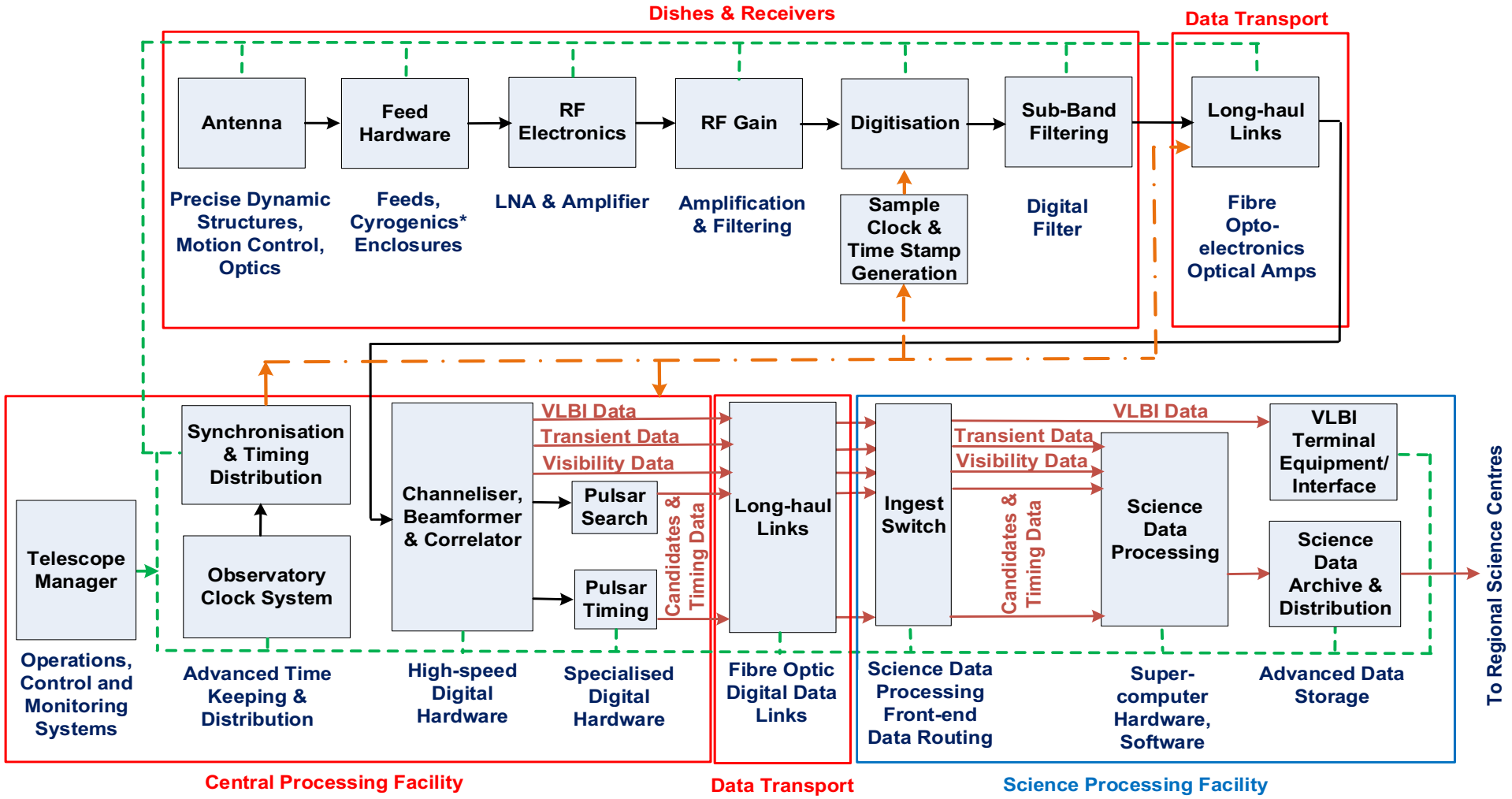

Mid Telescope Implementation

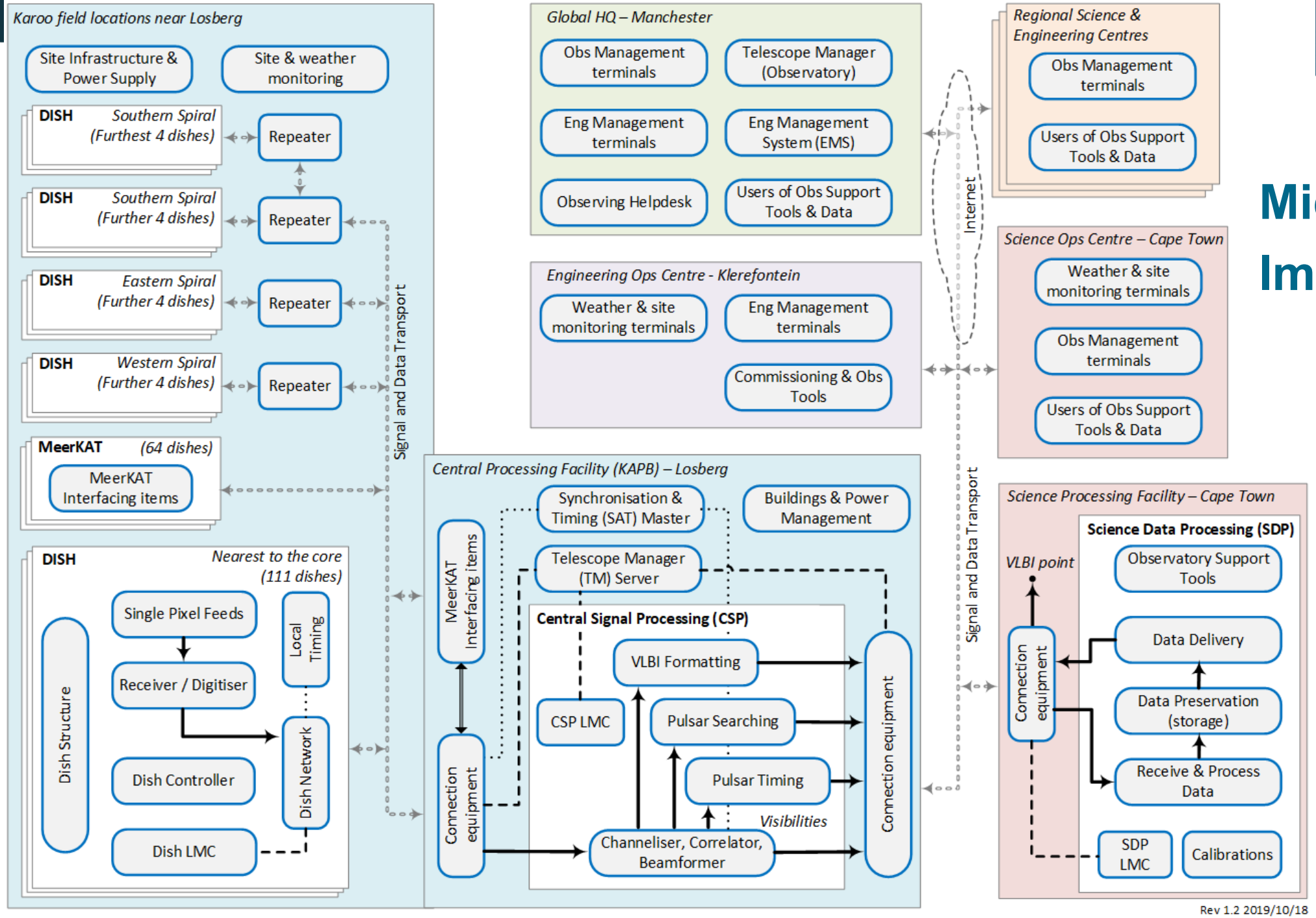

Rev 1.2 2019/10/18

SKA1-MID Configuration

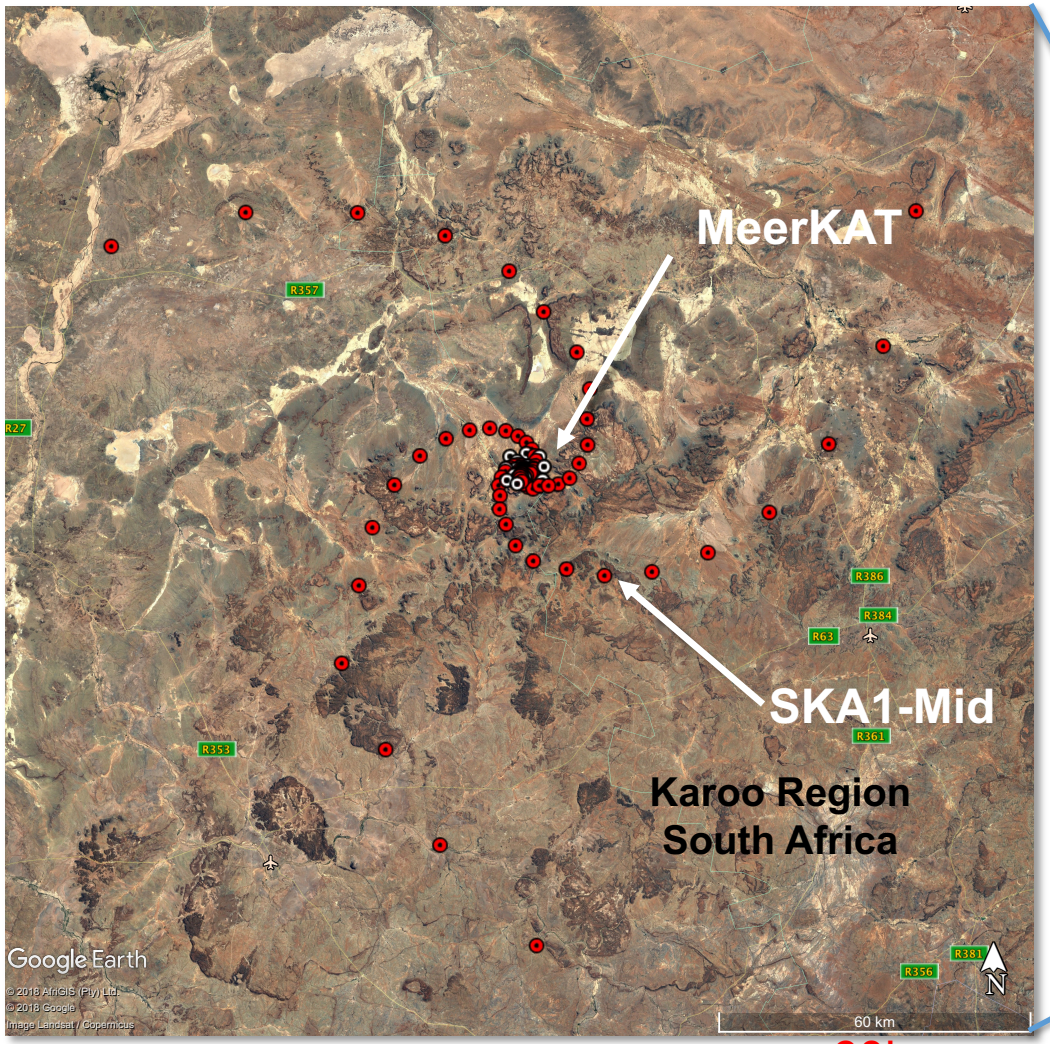

60km

- 133 SKA 15m dishes
- 64 MeerKAT 13.5m dishes
- Maximum baseline 150 km
- 3 logarithmic spiral arms
- Frequency range: 350 MHz to 15.4 GHz

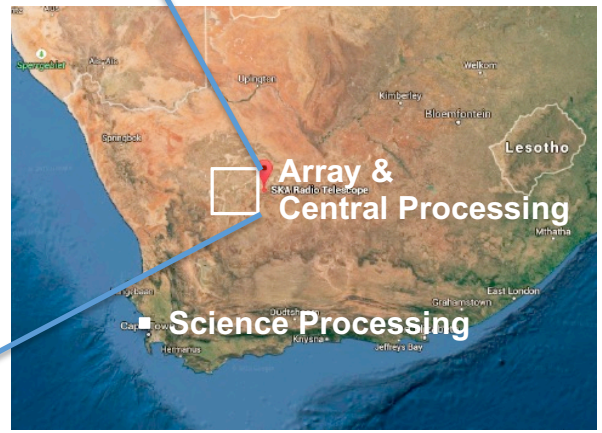

SKA1-MID Configuration

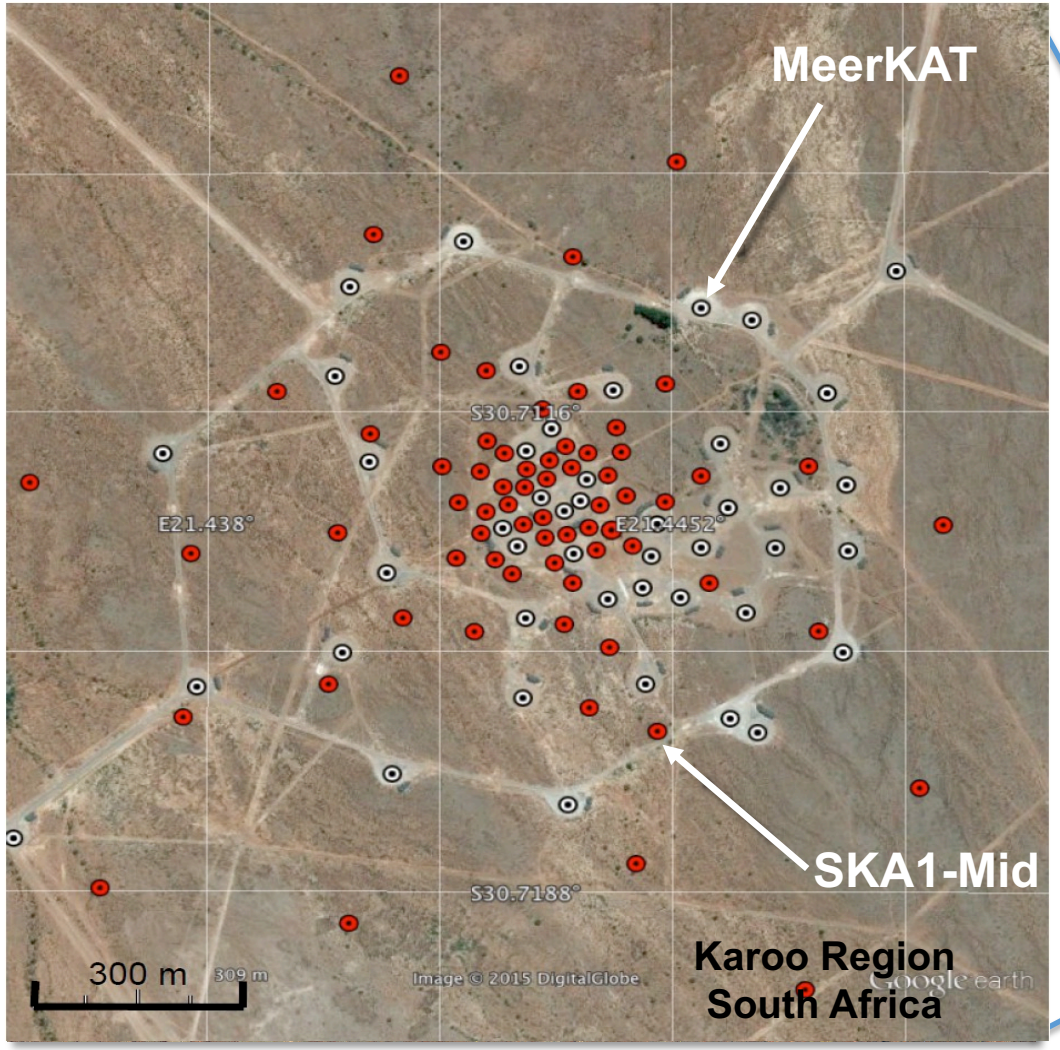

- 133 SKA 15m dishes
- 64 MeerKAT 13.5m dishes
- Maximum baseline 150 km
- 3 logarithmic spiral arms
- Frequency range: 350 MHz to 15.4 GHz

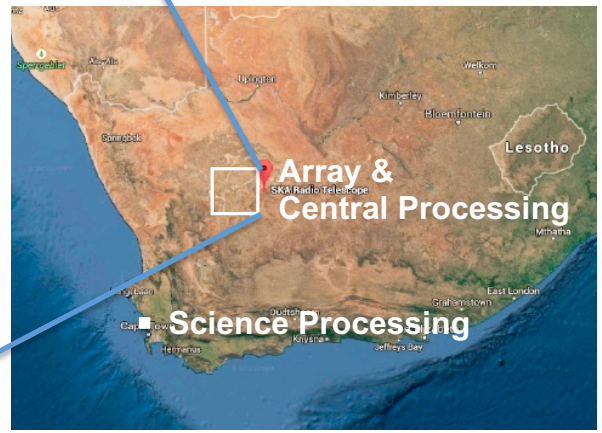

Infrastructure

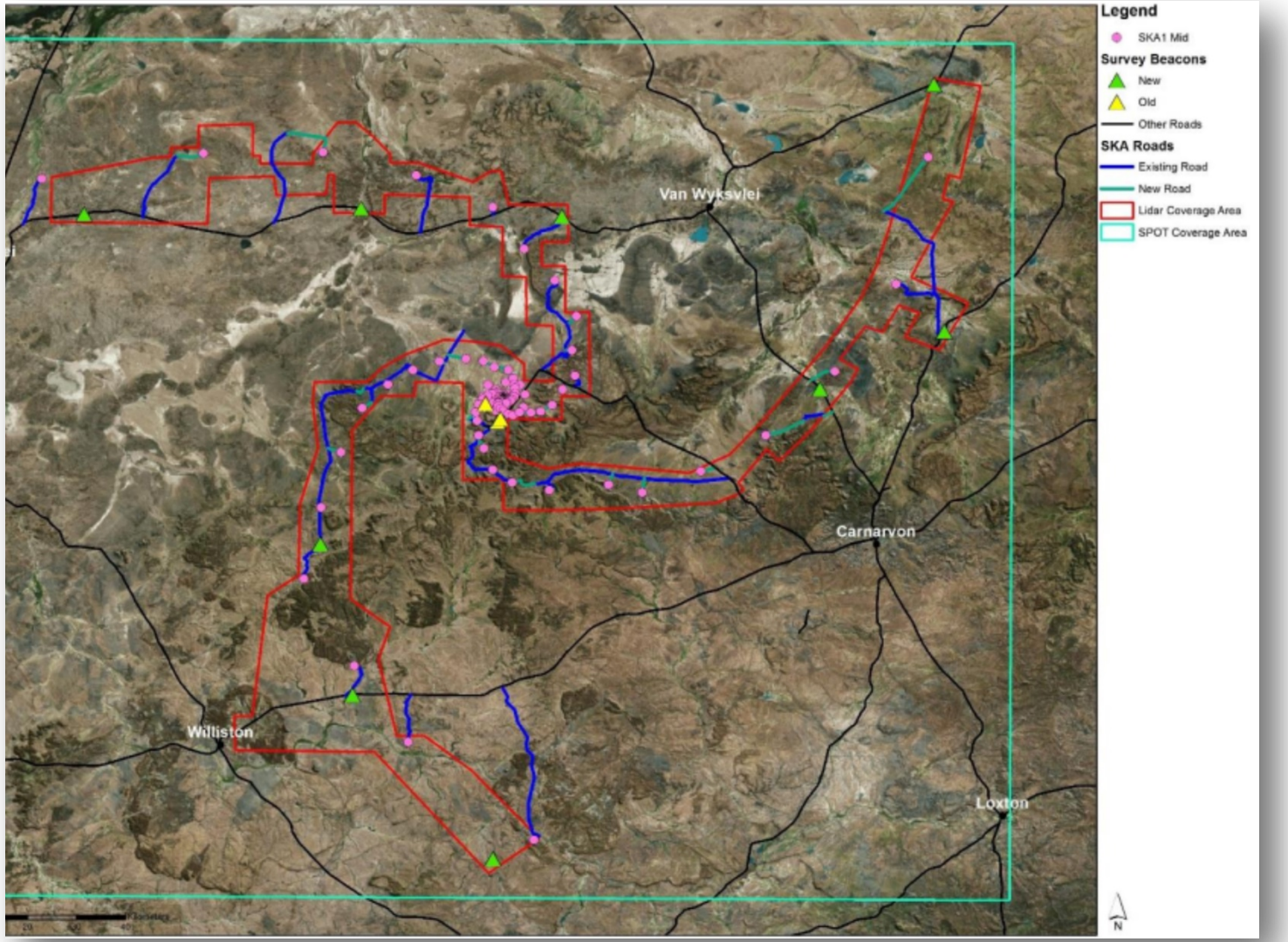

- Water
- Roads
- Power
- Fibre
- Buildings
  - CPF (KAPB)
  - EOC
  - SPC
- Cooling
- Dish Foundations

Dish Foundations

- Challenging stiffness to achieve pointing spec
- Prototype foundation
- Stiffness tests done
- Piling depends on soil per antenna

SKA1 Mid Antenna

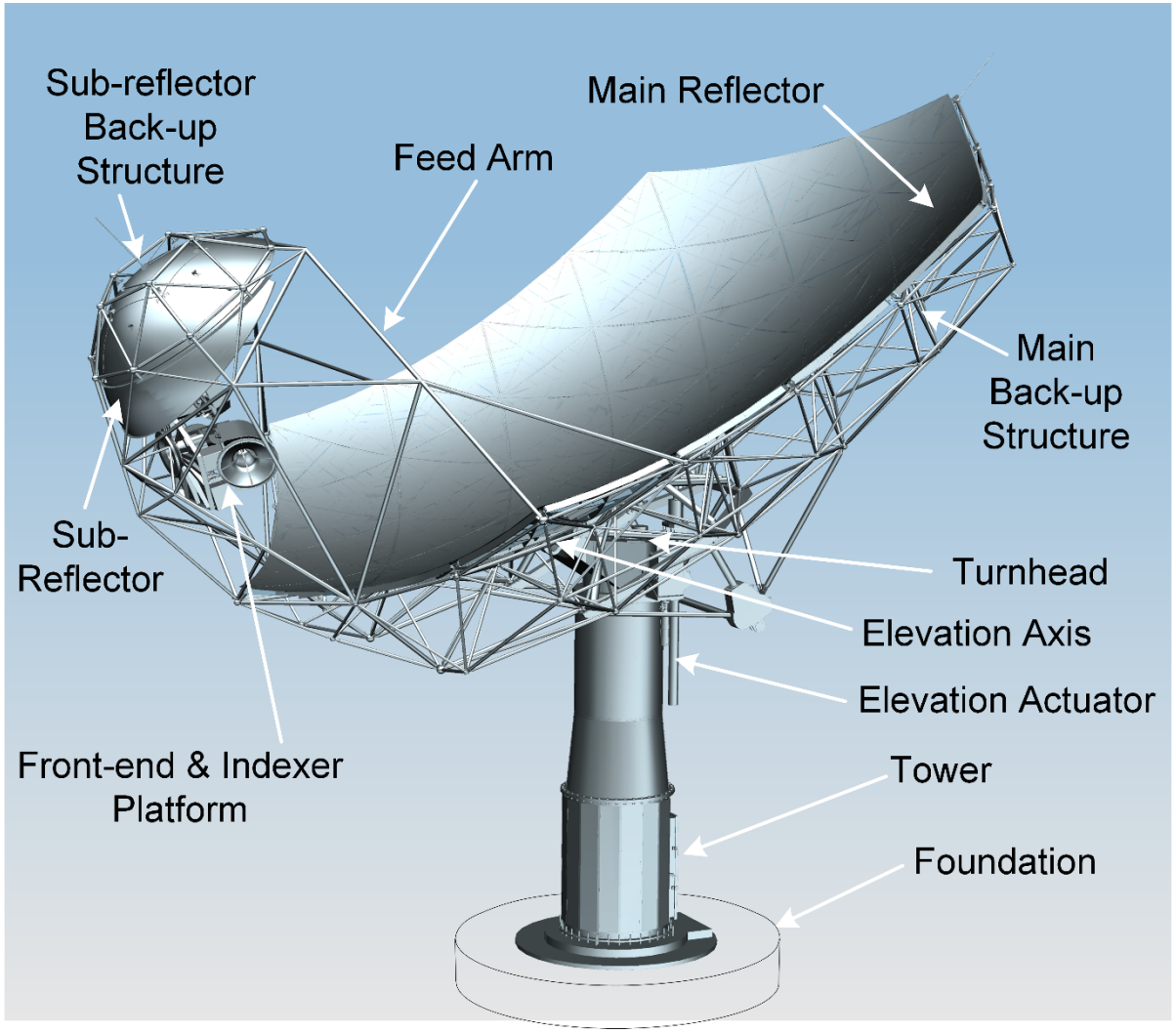

Antenna Features

- Frequency: 350MHz – 20GHz +
- 15 metre offset Gregorian optics
- Sub-reflector: 5 m, with skirt
- Tracking speed: 30 times sidereal rate @ 10arcsec accuracy
- Slewing Speed:
  - 1deg/sec elevation
  - 3deg/sec Azimuth
- Indexing speed: Less than 30 sec

Antenna Pedestal

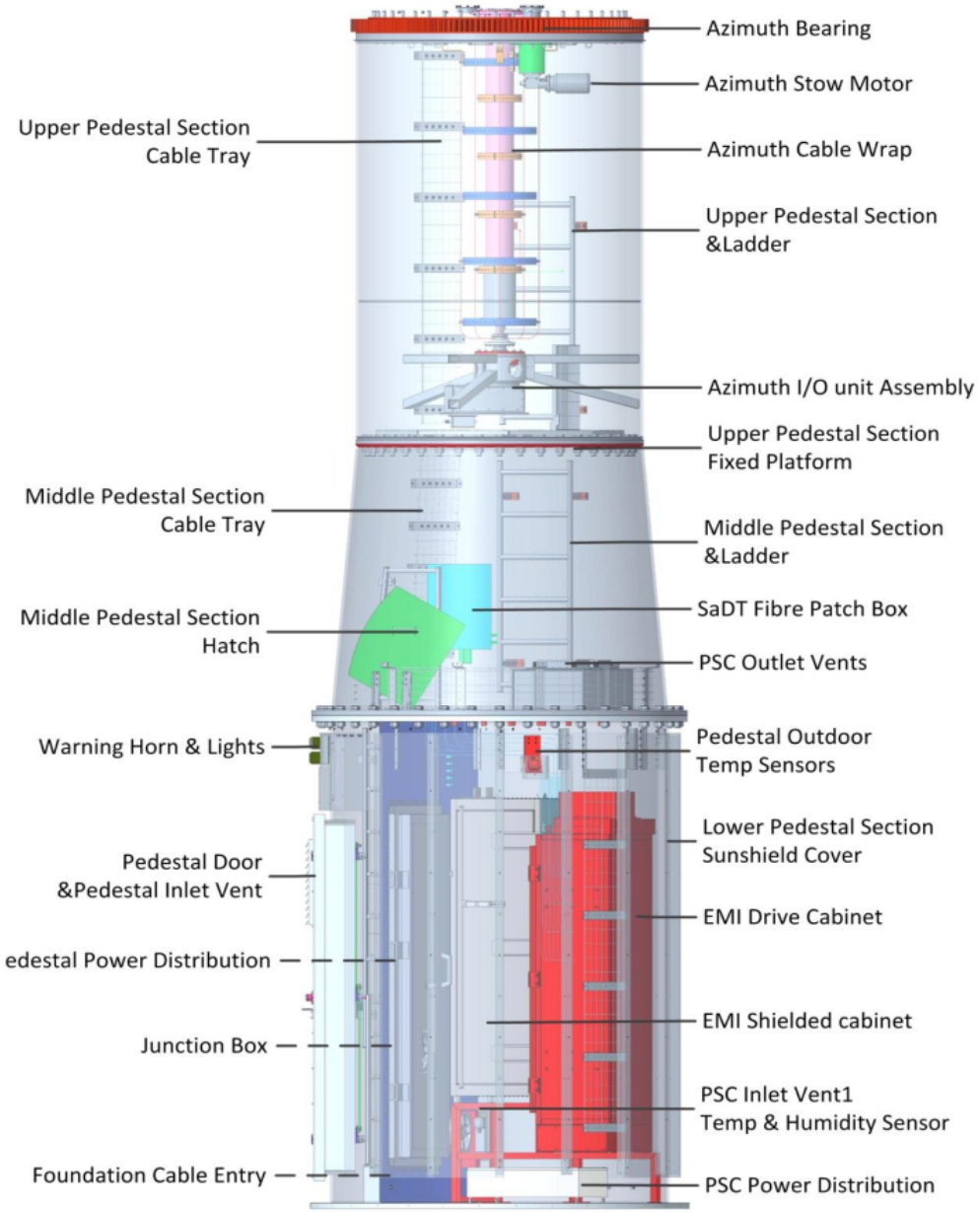

Pedestal Features

- High stiffness
- Azimuth bearing & encoder
- Houses control & network equipment
- EMI Shielded Compartment:
  - 145 dB (50 MHz- 13.8 GHz)
  - 95 dB (13.8 - 20GHz)
- Tilt and temperature sensors to improve pointing

Antenna Performance

Sensitivity per Band estimates

Band	Frequency (GHz)	BW (MHz)	Sensitivity Requirement (m^2/K)		Design (m^2/K)
			Array (L1)	*Dish (L2)*	*Dish (L2)*
1	0.35 – 0.650 0.65 – 1.050	700	272 – 545 545	2.1 – 4.2 4.2	2.5 – 5.0 5.4
2	0.95 – 1.760	808	916	7.1	10.9
3	1.65 – 3.050	1403	916	7.1	--
4	2.80 – 5.180	2380	833	6.6	--
5a	4.60 – 8.500	3900	1110	8.86	9.52
5b	8.30 – 15.40	7000	805	6.74	7.93

Pointing performance estimates

		RMS error (arcsec)	RMS error (arcsec)	RMS error (arcsec)
Blind Pointing Error	Requirement	9	18	36
	Design	5.5	11	21.7
Relative Pointing Error	Requirement	1.3	2..6	5.2
	Design	1.2	3.5	6.7
Tracking Stability	Requirement	2.3	4.6	9.2
	Design	1.5	4.4	8

SKA1-MID Feed Indexer

- Supports 3 feed packages
- Removable sun shields for sunlight and rain protection
- Supports 2 digitisers, vacuum pump, power and fibre

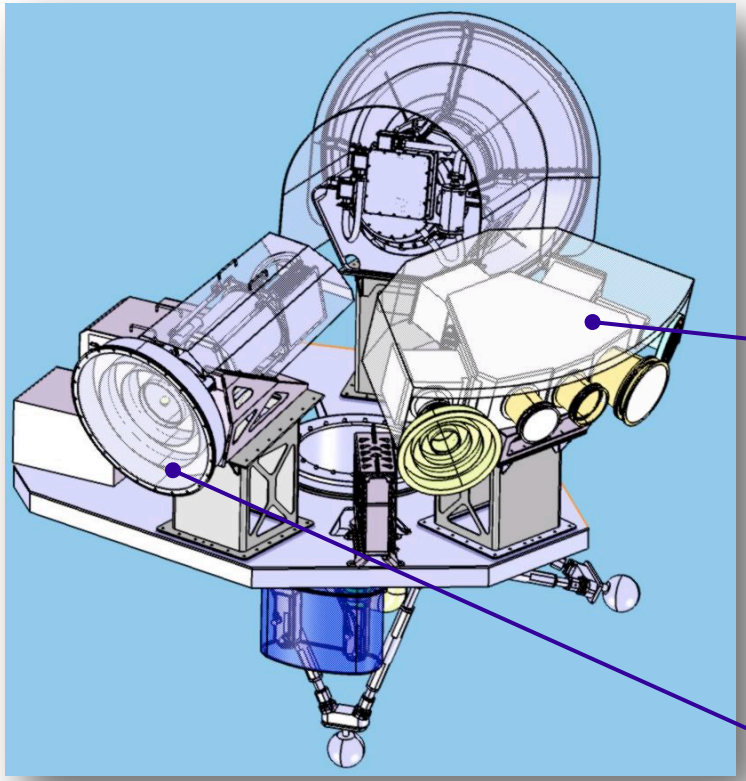

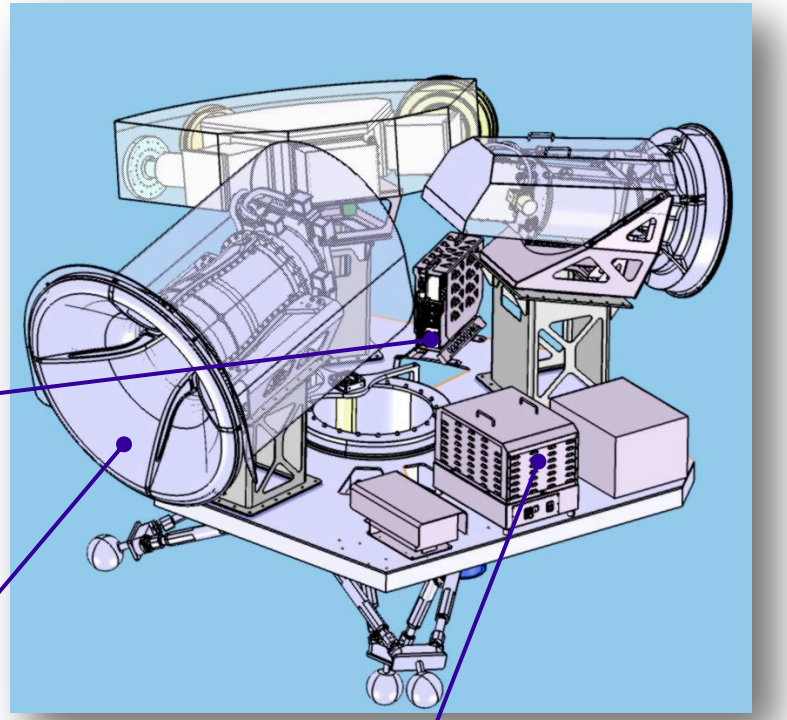

- Rotation: 203 deg (feed packages ~100 deg apart)
- Overall center of mass close to the axis of rotation

Band 1 Single Pixel Feed

- 350MHz – 1050MHz; 3:1 bandwidth
- Dual Polarisation
- Quad Ridged Feed Horn
- Room temperature LNAs (Low Noise Factory)
- LNAs embedded in fins – minimise losses

Qualification tests on MeerKAT

Band 2 Single Pixel Feed

- 950MHz – 1760MHz; 1.85:1 bandwidth
- Dual Polarization
- Crossed dipole-based Ortho Mode Transducer (OMT)
- LNAs cooled to 20K; OMT cooled to 70K
- Coolstar 2/9 cryocooler
- Feed package based on MeerKAT design

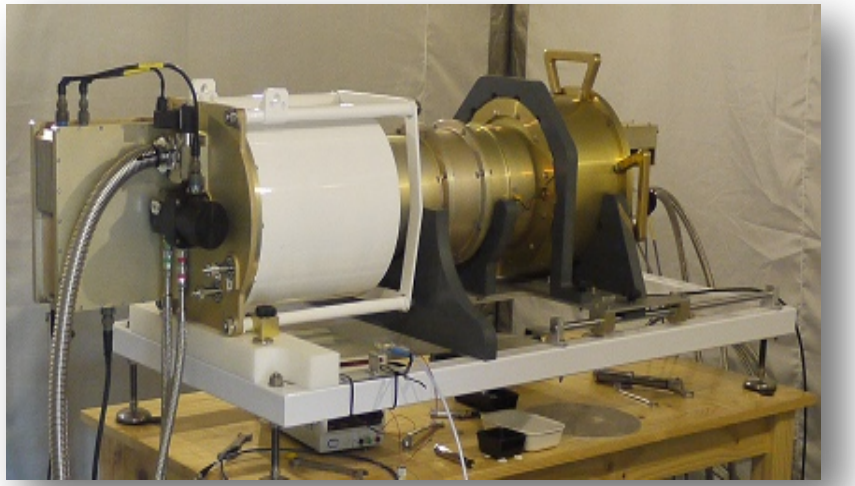

Qualification tests at EMSS

Under test on a MeerKAT dish

Band 345 Single Pixel Feed

- Modular Cryostat, dual polarisation
- Supports Bands 3, 4, 5a, 5b and 5c
  - 5c not defined in detail
- Band 5a (4.6GHz – 8.5Hz) and Band 5b (8.3GHz – 15.4GHz) fitted initially
- Band 5a/5b feeds cooled to 70K; LNAs at 20K
- Coolstar 6/30 cryo-cooler
- Band 5a – quad-ridged OMT; Band 5b turnstile OMT

Band	Freq. [GHz]	BW
Band 3	1.65 – 3.05	1.84
Band 4	2.80 – 5.18	1.85
Band 5a	4.6 – 8.5	1.84
Band 5b	8.3 – 15.4	1.84

Band 345 feed package – Initial configuration

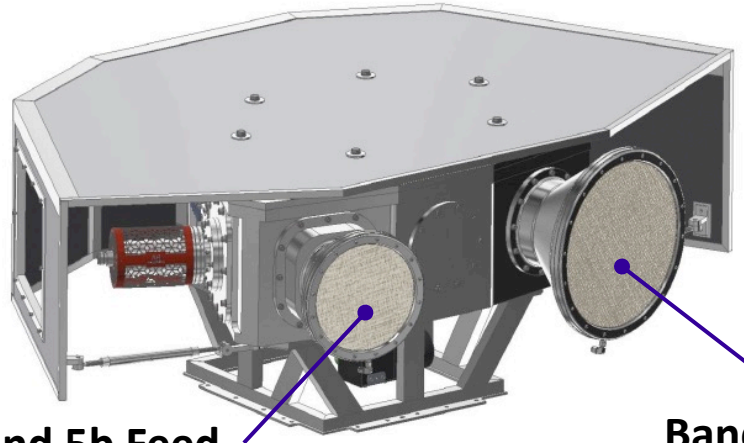

Band 345 feed package – All Feeds Installed

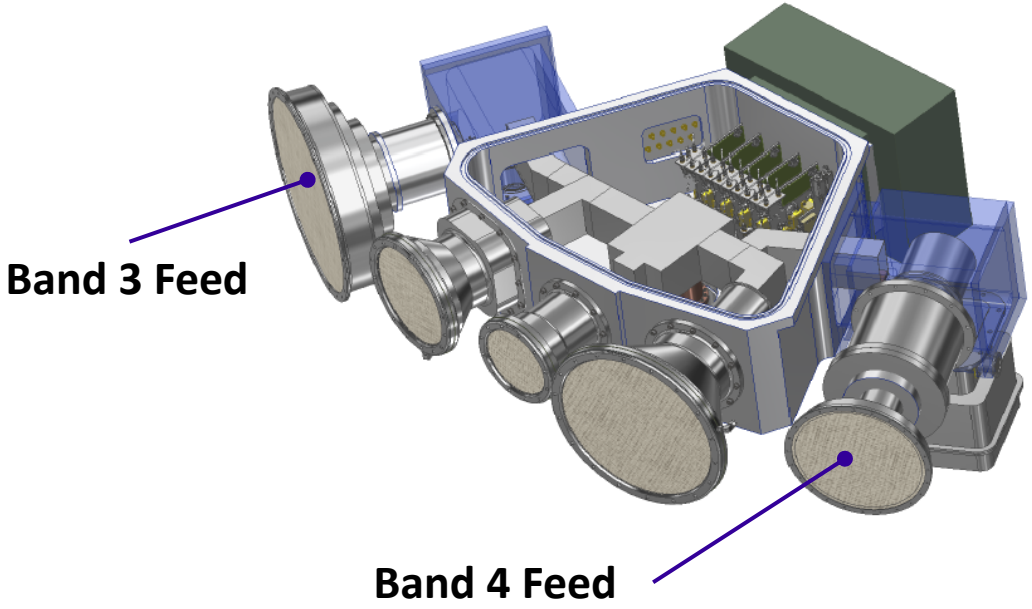

SKA1-MID SPF Receiver (Digitisation)

- RF samplers located on the Feed Indexer
- Packetiser, DSP and C & M located in RFI enclosure in the Dish Pedestal (TALON)
- Separate Band 123 and 345 Digitisers

Band	Frequency (GHz)	RF BW (MHz)	Sampling Rate (GSps)	Nyquist Zone	ADC Sampling Bit Depth	Transport Sampling Rate (GSps)	Transport Bit Depth	Transport Data Rate (Gbps)
1	0.35 – 1.050	700	3.96	1	8	3.96*	12	95.04
2	0.95 – 1.760	808	3.96	1	8	3.96*	12	95.04
3	1.65 – 3.050	1403	3.168	2	6	3.168*	12	76.032
4	2.80 – 5.180	2380	15.84	1	4	5.94*	8	95.04
5a	4.60 – 8.500	3900	8.91	2	3	2 x 5.94*	4	95.04
5b	8.30 – 15.40	7000	15.84	2	3	2 x 5.94*	4	95.04

*Offsets are added to these frequencies to reduce correlated noise

Signal and processing chain

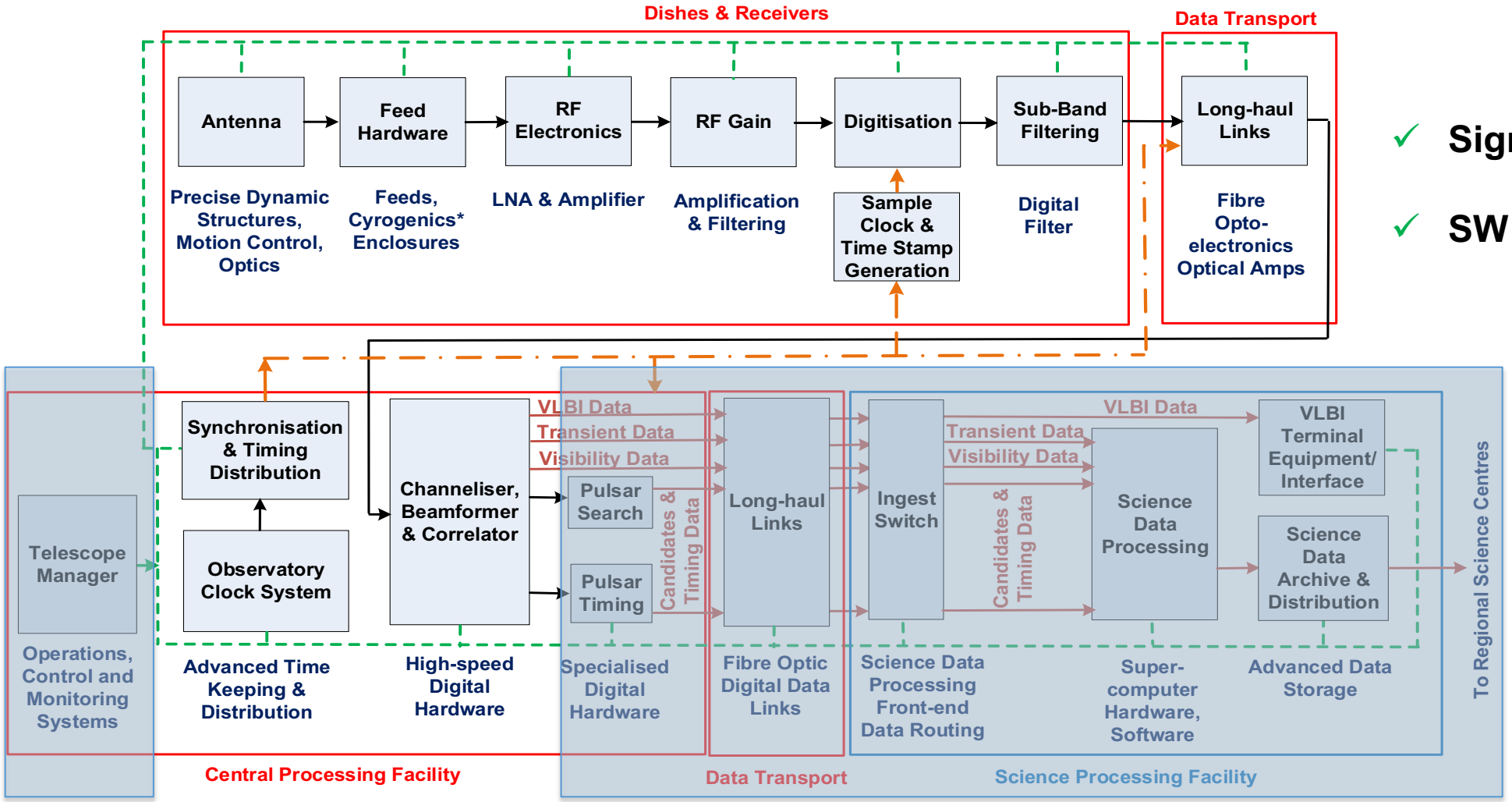

- ✓ **Signal Chain talk**
- ✓ **SW Talks**

Correlator Beamformer (CBF)

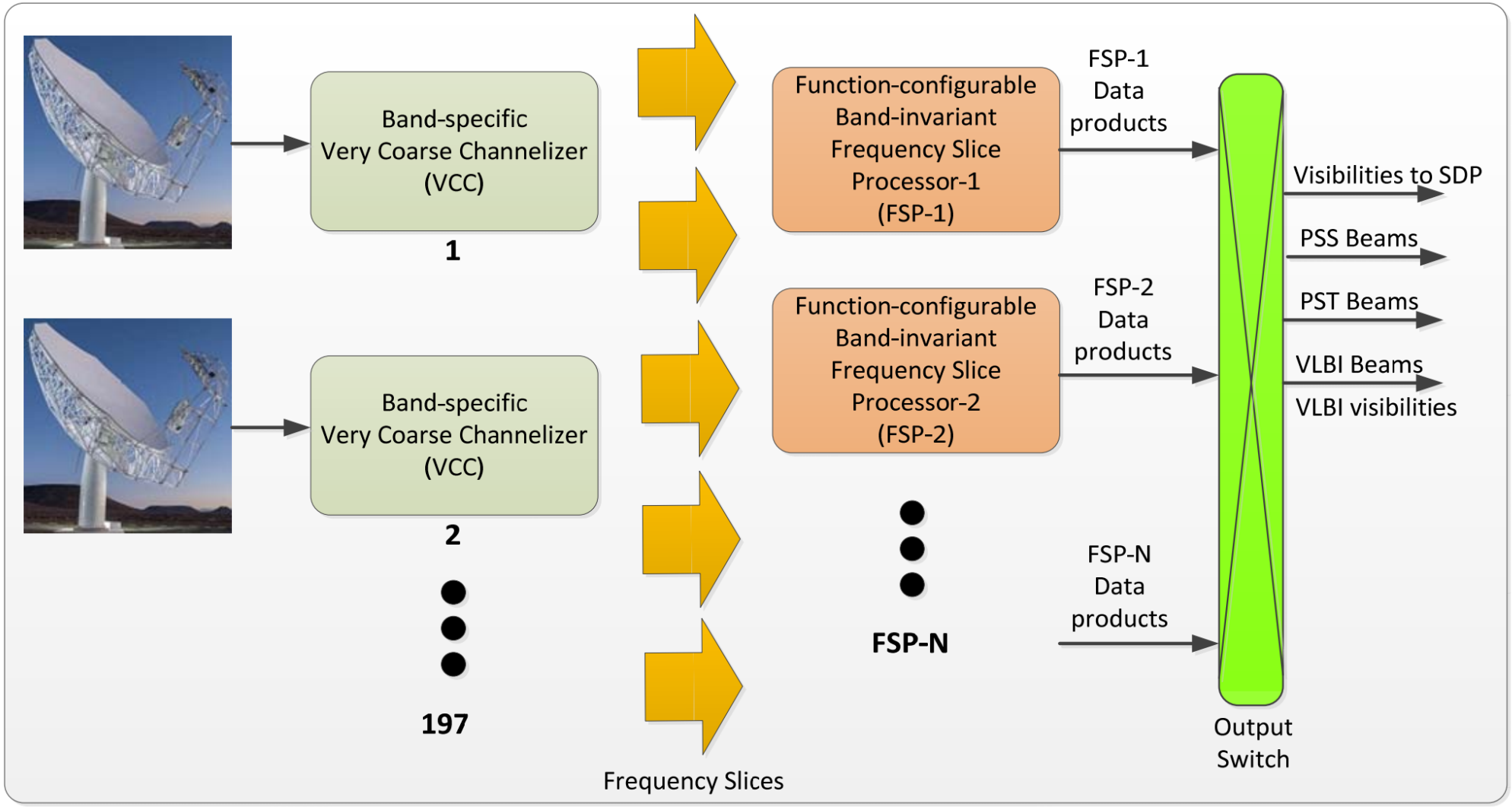

Correlator features

- Frequency-slice Architecture
- Modular, scalable design
- TALON bespoke boards (FPGA) used for VCC and FSP

✓ **Signal Chain talk**

Prototype TALON Processing Board with air cooling

CBF Hardware concept

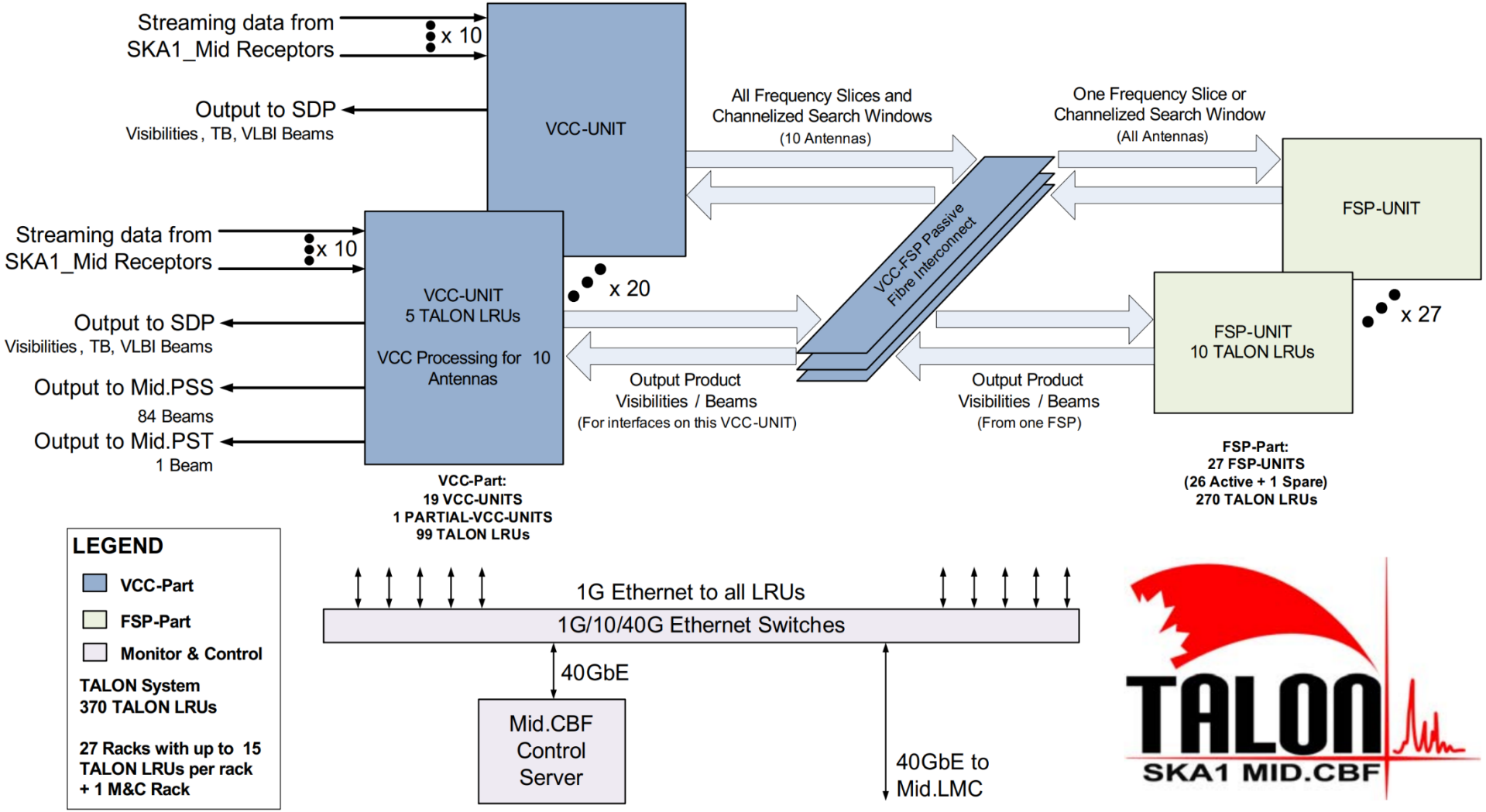

SAT Architecture

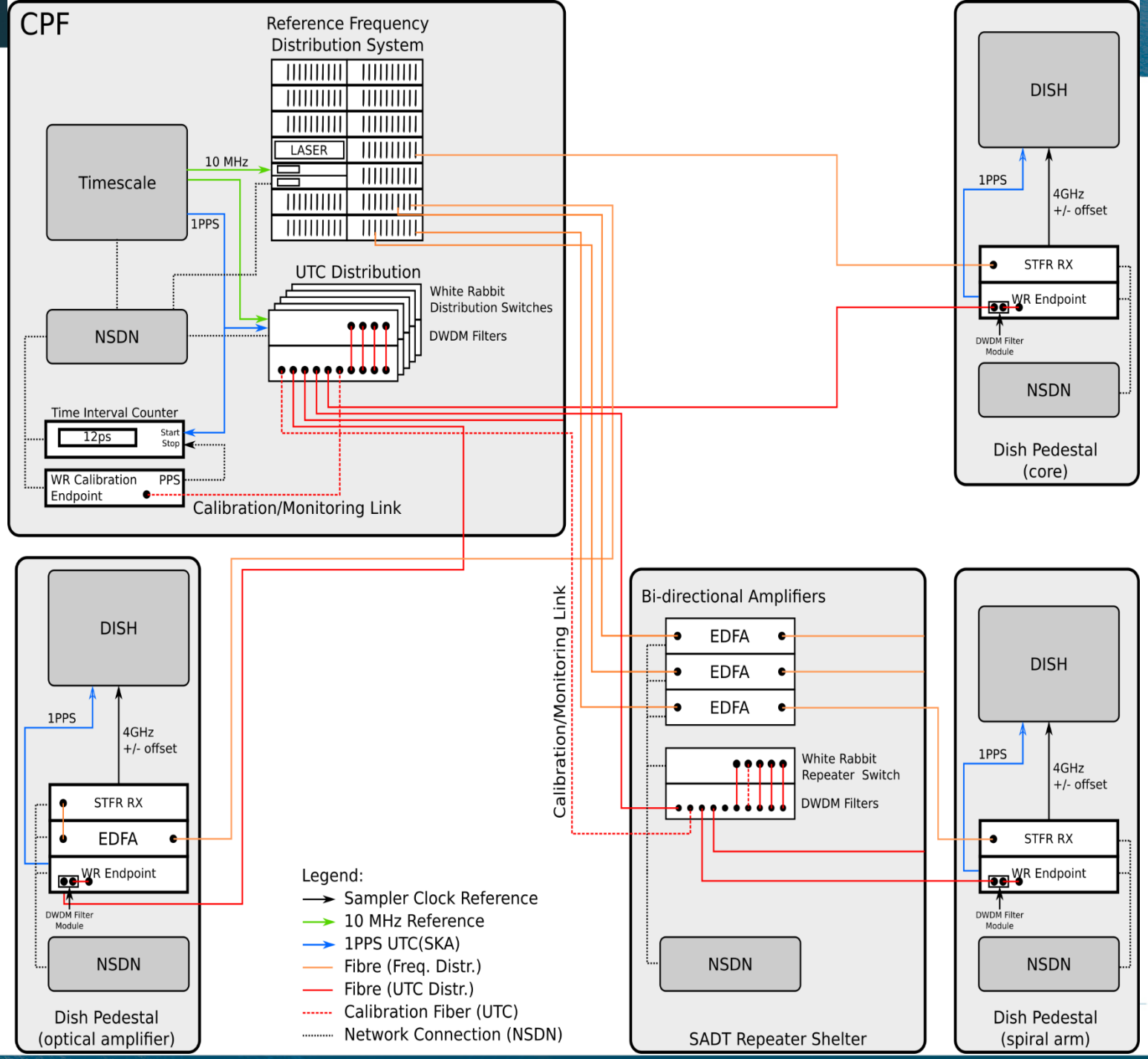

- 3 x redundant Masers
- Steered to align with BIPM
- Timsecale 3.0 to 4.8 ns absolute accuracy to UTC
- 1PPS distributed via White Rabbit solution
- Delay correction loop for fibre in SAT.FRQ
- Overall system coherence loss meets requirement

SKA1 & MeerKAT integration

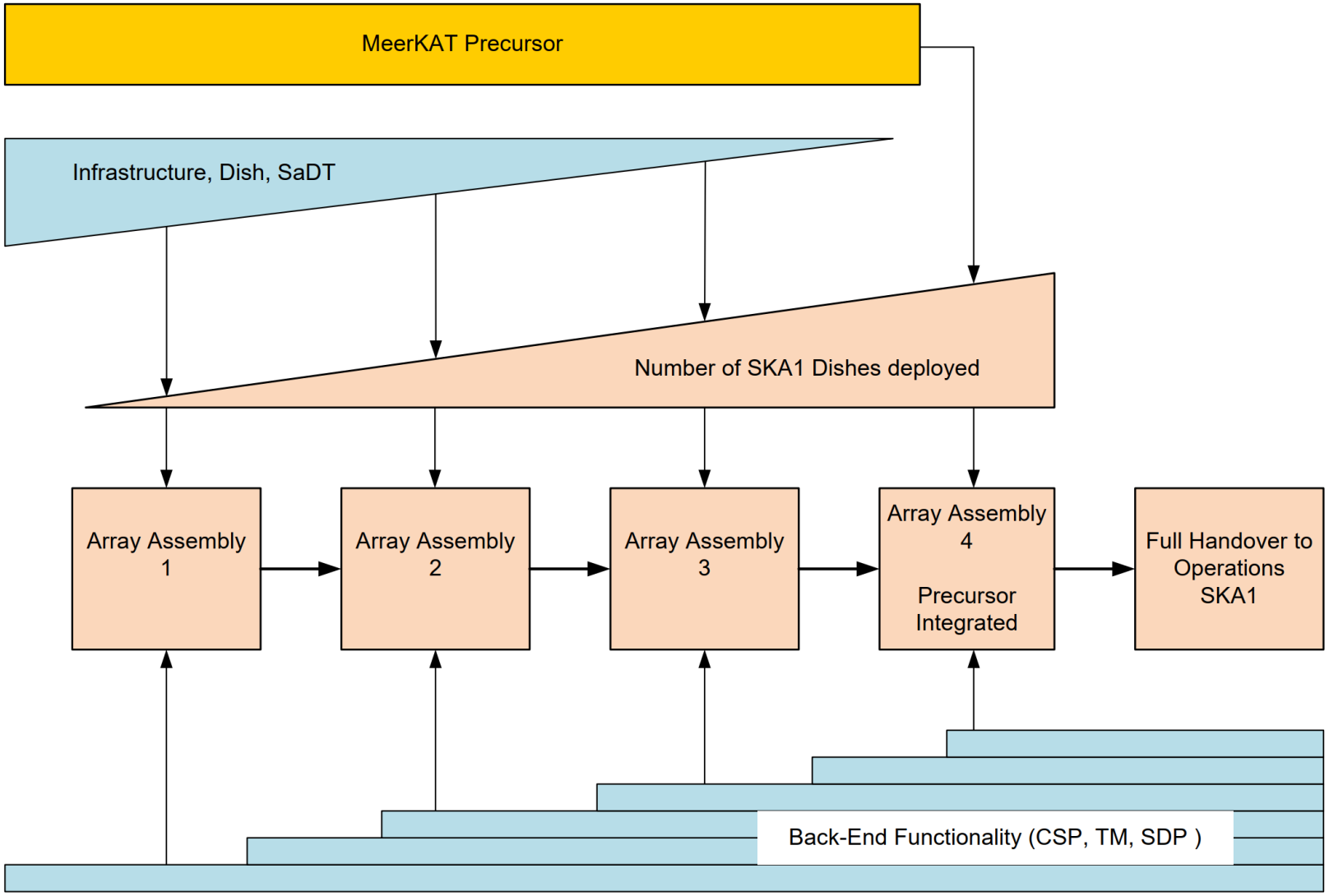

Achieving Operational Availability

MTBF/MTTR per item

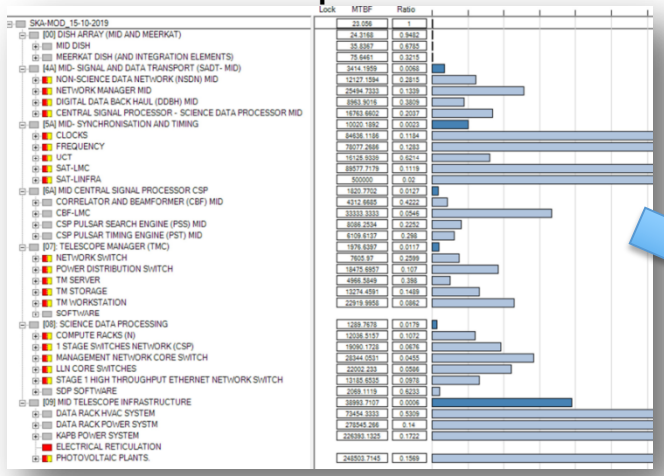

Maintenance Plans

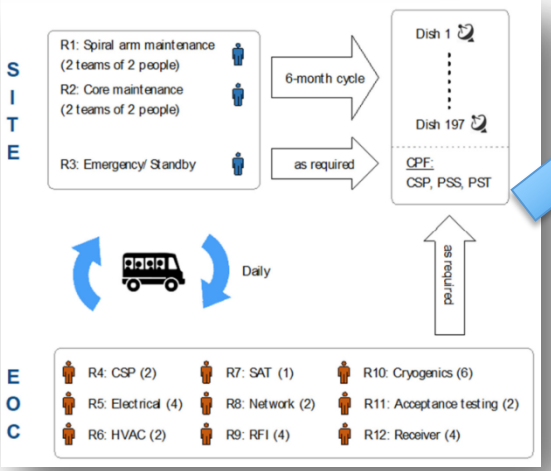

Maintenance models

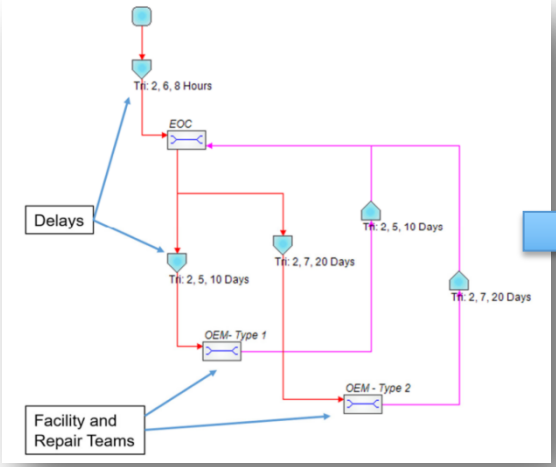

Operational Availability Estimate

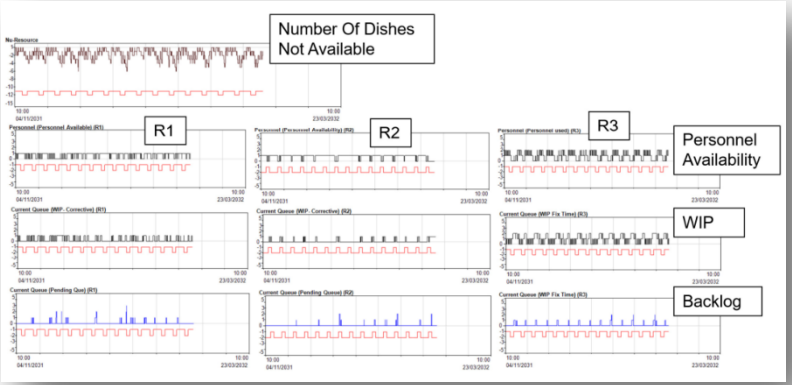

✓ **Ops talks**

SKA1 Multinational Project

Well done!!

Thank you!

Questions?

g.swart@skatelescope.org

Frequency Distribution

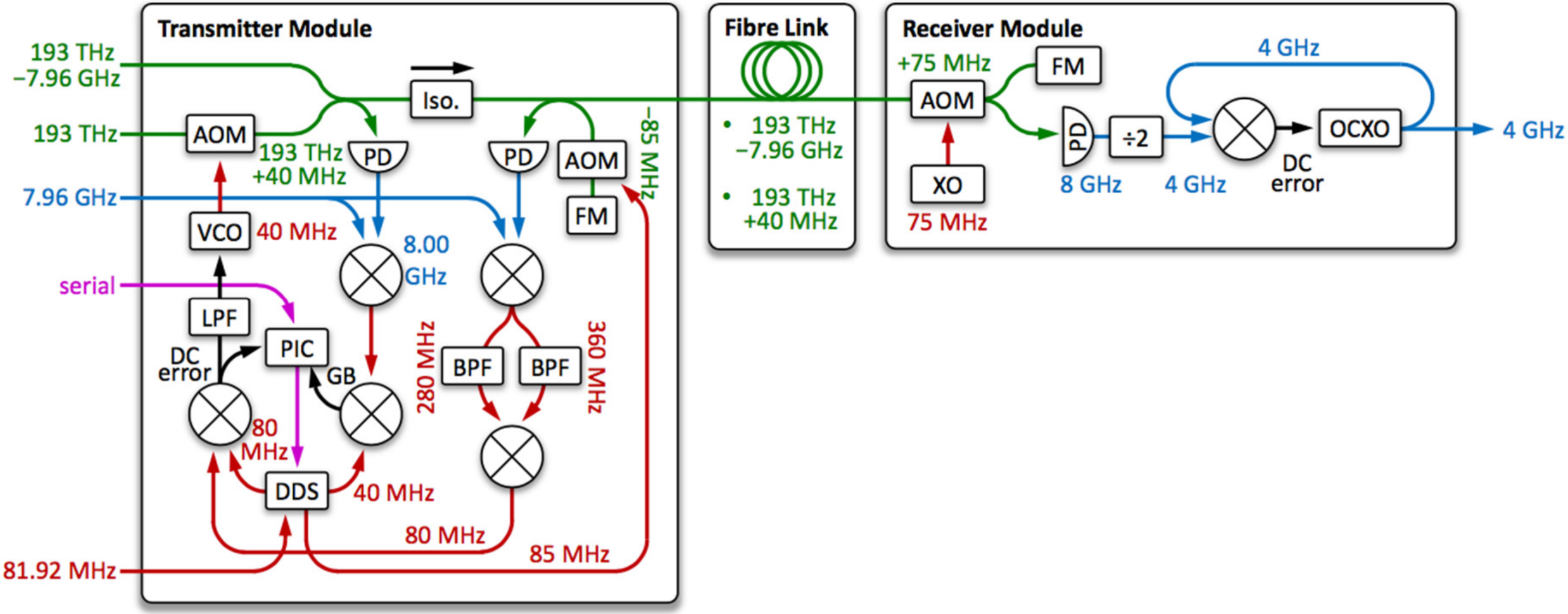

Figure 4 Simplified schematic of the STFR.FRQ Transmitter Module, fibre link, and Receiver Module from STFR.FRQ DDD

Timescale Architecture

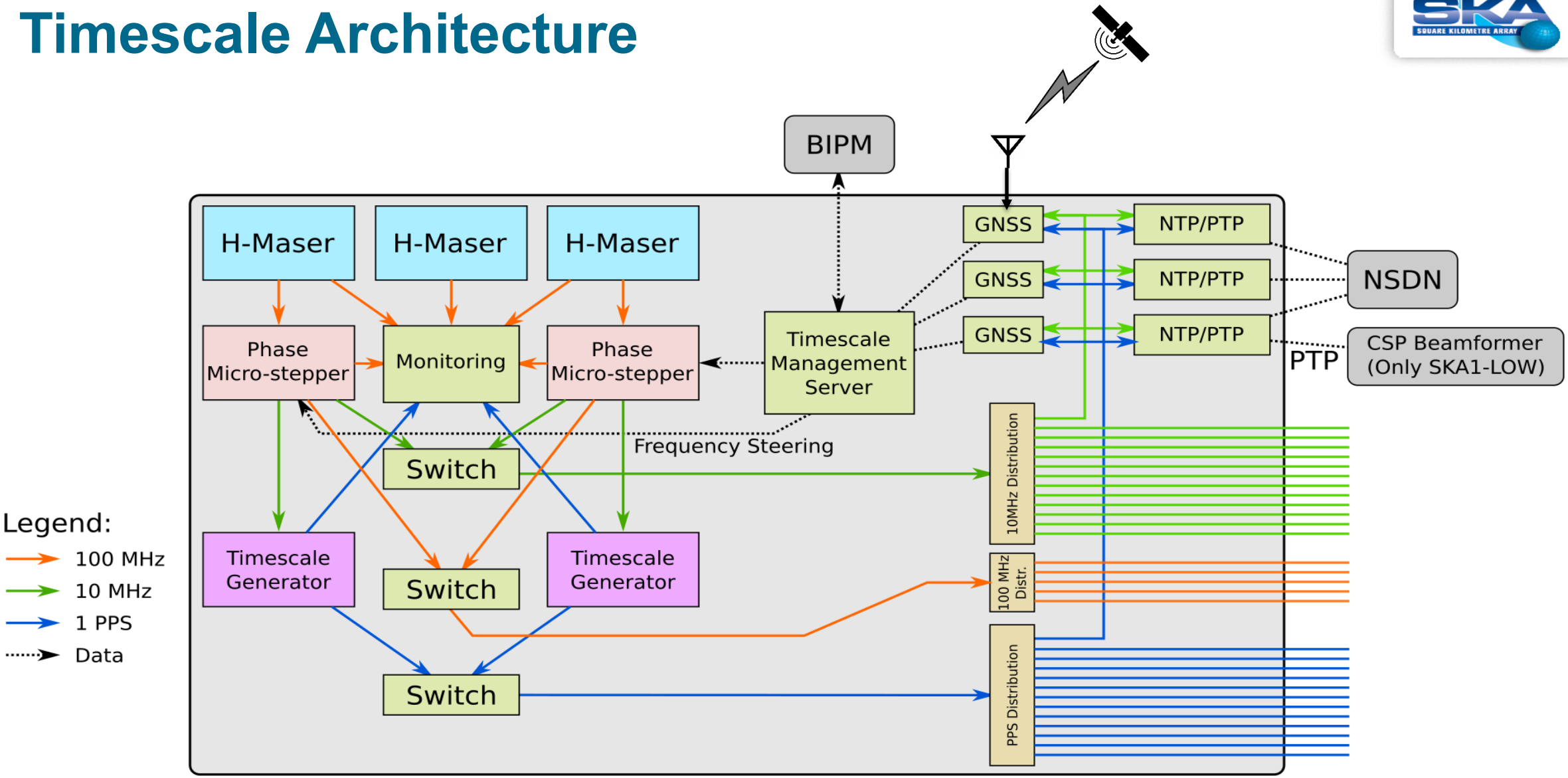

Correlator Beamformer (CBF)

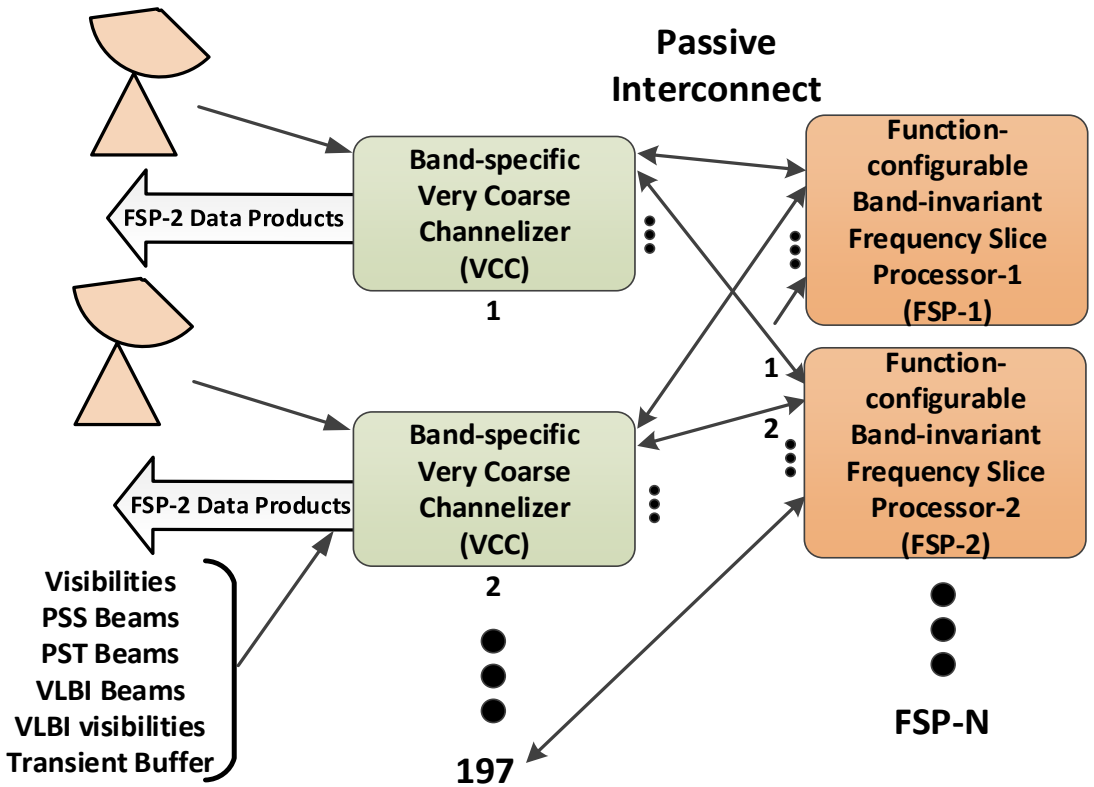

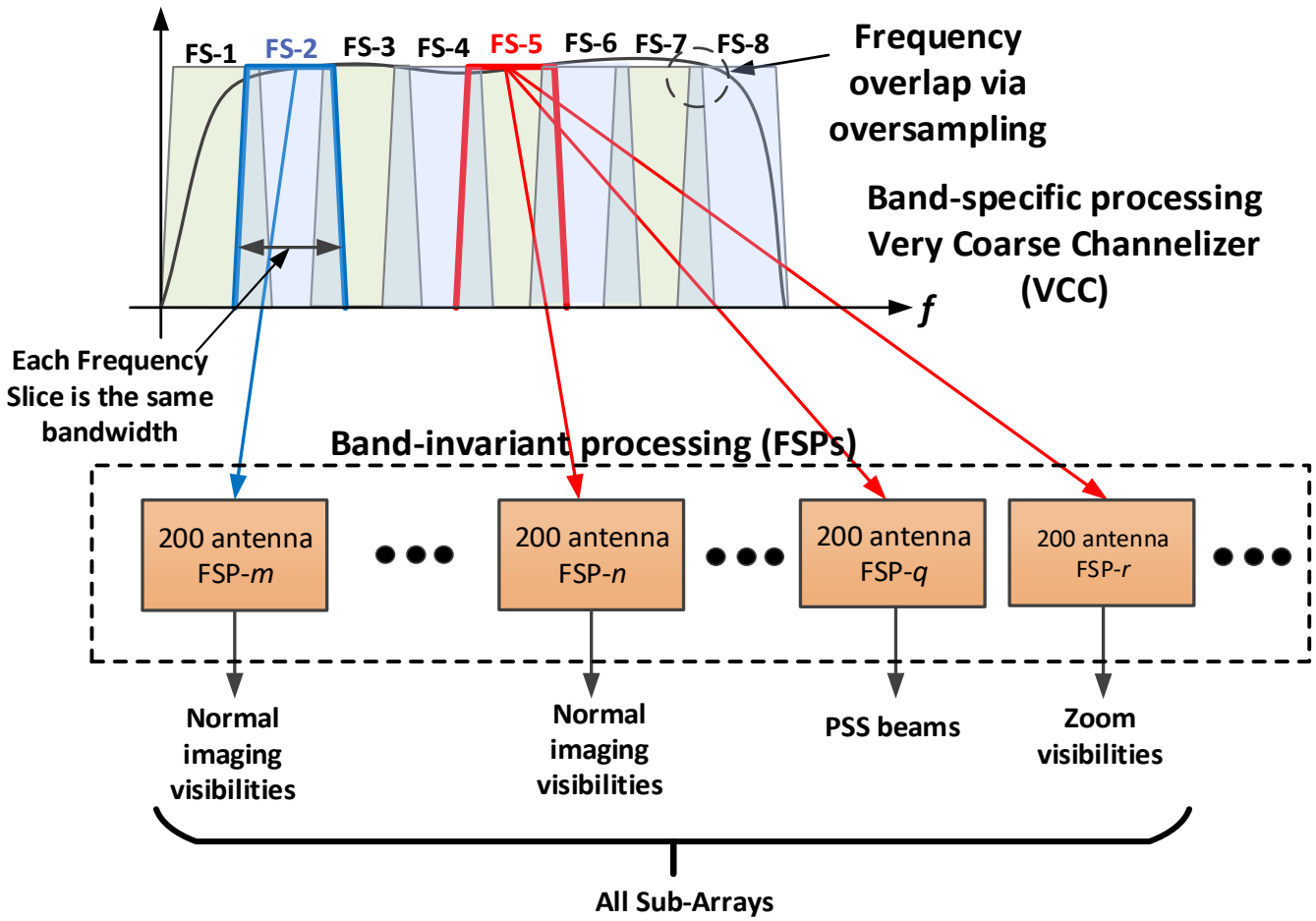

How it works

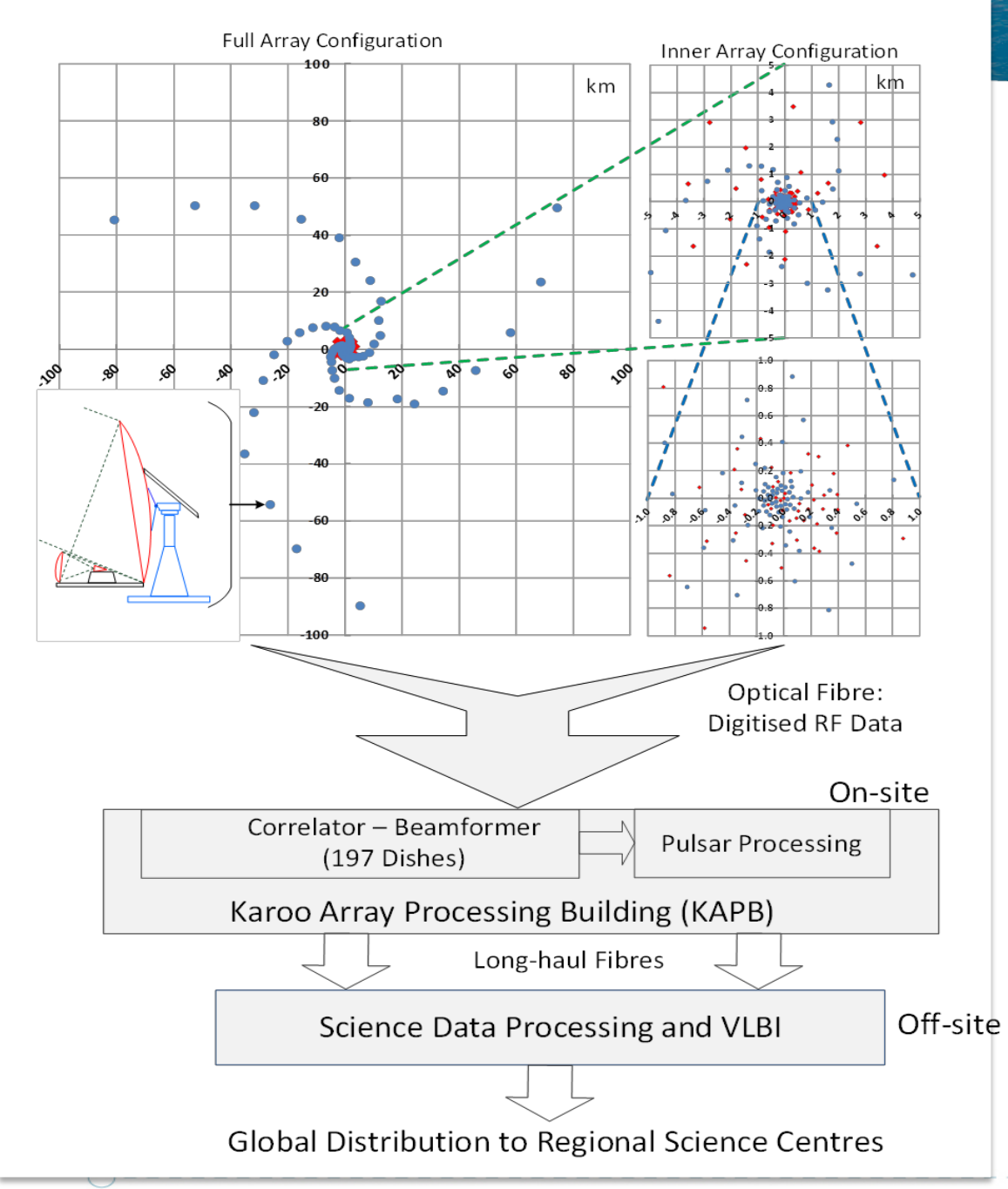

- 133 SKA 15m dishes
- 64 MeerKAT 13.5m dishes
- Maximum baseline 150 km
- 3 logarithmic spiral arms
- Frequency range: 350 MHz to 15.4 GHz